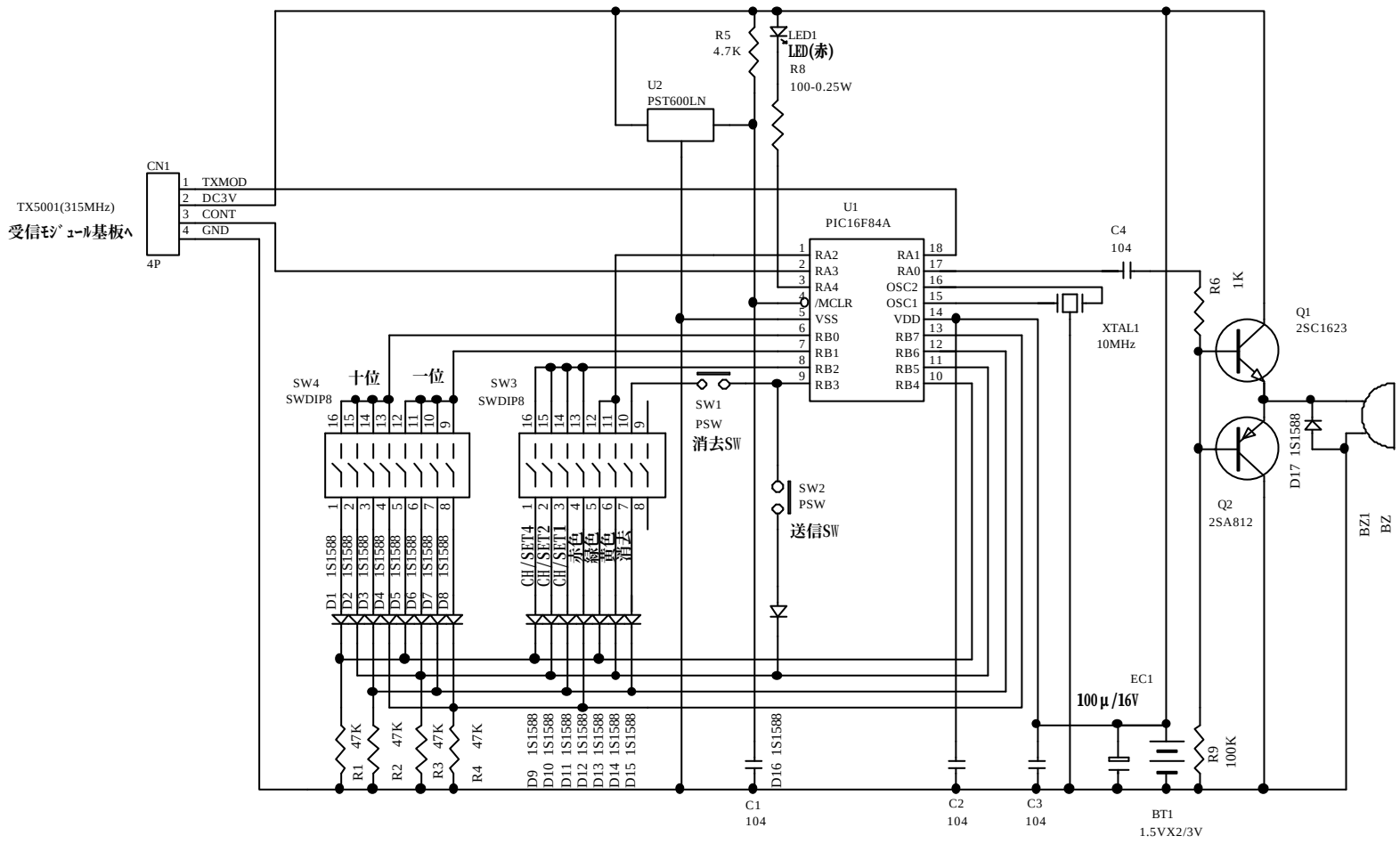

Title	COCO_送信回路	
Size A4	Number (有)ｴｺｰ総合企画	Revision COCO_V1.0
Date: 11-Jul-2003		Sheet of
File: C:\WINDOWS\..\TX1.SCH		Drawn By: Kubota