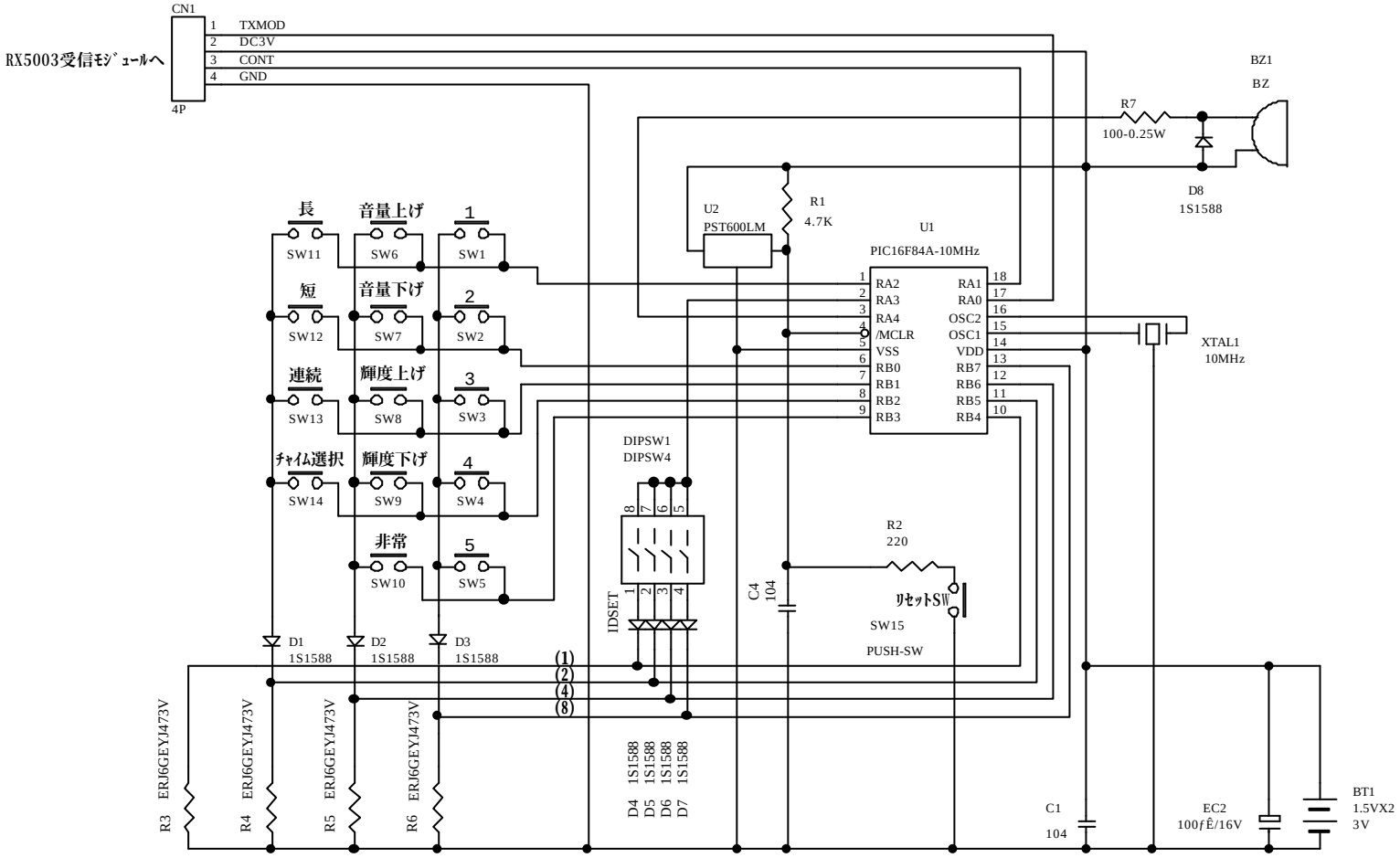

Title	COCO_設定&消機	
Size A4	Number (有)ｴｺｰ総合企画	Revision COCO_VER1.0
Date: 8-Jul-2003		Sheet of
File: C:\WINDOWS\..\ER_TX.SCH		Drawn By: Kubota