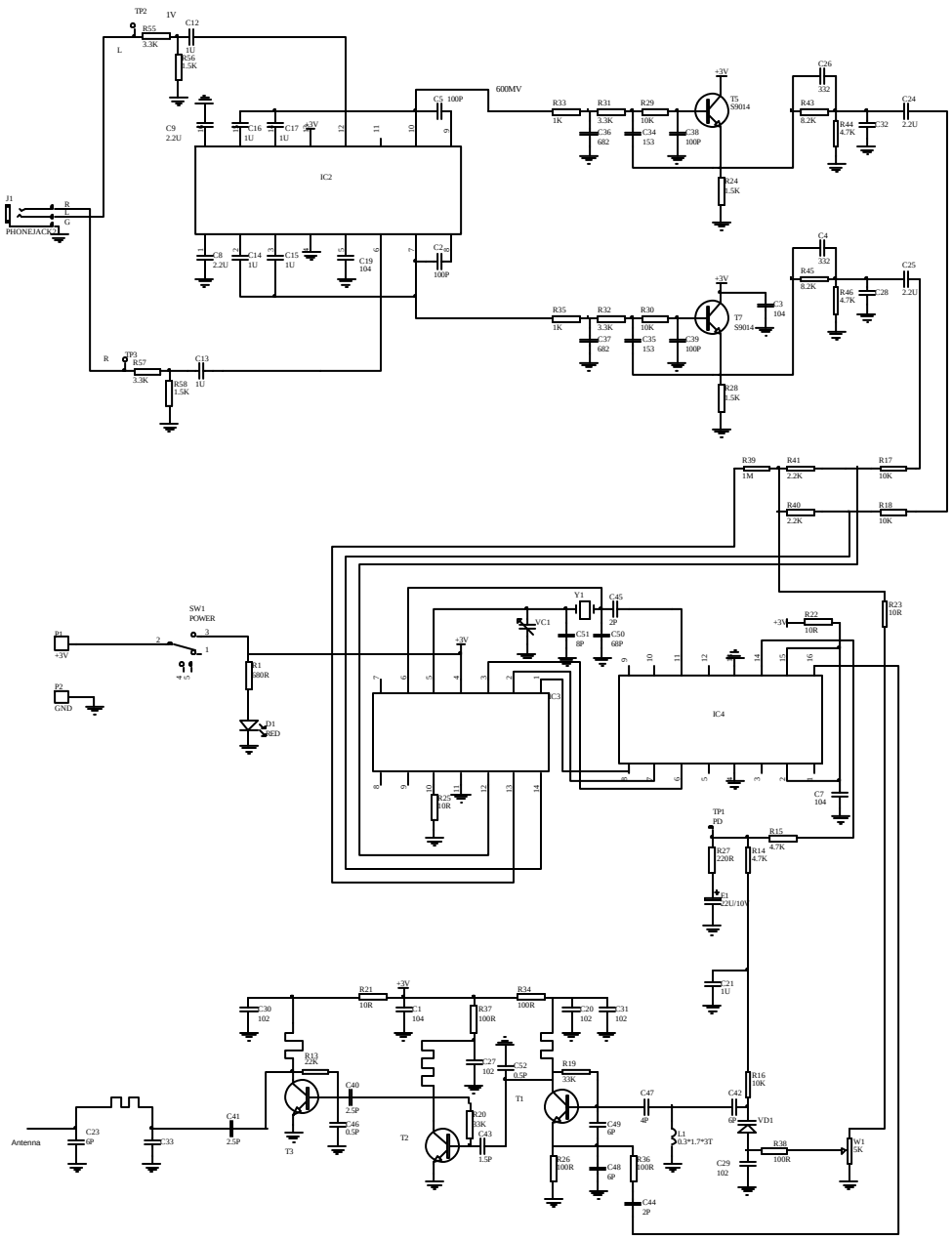

Title		
Size A2	Number	Revision
Date: 14-Aug-2008		Sheet of
File: F:\N_V0\11\RCR\11HK SSB TRANSCEIVER.Sch		