# Temperature Sensor

# Model: WN34BL

## Contents

1. Getting Started..... 2
    1.1 Parts List..... 2
2. Overview ..... 3
    2.1 Features ..... 4
3. Setup Guide ..... 6
    3.1 Installing battery ..... 6
4. Sensor Placement ..... 9
5. Wi-Fi Configuration with gateway ..... 12
    5.1 Pair with Gateway ..... 12
    5.2 Wi-Fi Connection for the Gateway. 14
6. View Online Data with WS View ..... 14
7. Set Email Alerts..... 16
8.Specification..... 17
9.W FCC Statement..... 18

# 1. Getting Started

## 1.1 Parts List

One Temperature Sensor
One Mounting bracket for sensor
One Hose clamp for mounting to pole
One Hexagon M12 screw for mounting
One Screw ST D3.2*M2.0*6 for mounting
One User Manual

# 2. Overview

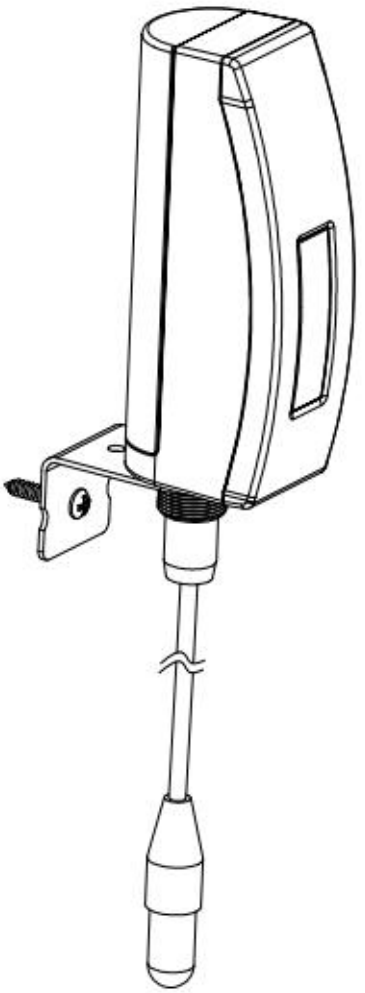

Figure 1: Temperature Sensor

This temperature sensor is mainly used to test water temperature.

## 2.1 Features

**Temperature Sensor**

- Measures temperature with a 3m (10ft) cabled sensor
- Extended wireless range up to 300 feet (100 meters) in open areas.
- Transmits readings every 77 seconds.
- IP65 waterproof.
- LCD display for current reading.

**When paired with a GW1000/GW1100 Wi-Fi Gateway:**

- View temperature reading on the Live Data page of the WS View app (requires that the gateway and your phone are using the same Wi-Fi network).
- Up to 8 channels supported. Channel names can be edited on the app.
- Battery level information displayed on the WS View App.

**When paired with a Weather Station Console (HP2551/HP3500/HP3501):**

- View temperature data in real-time on the Display.
- Up to 8 channels supported. Channel names can be edited on the console.

**When uploaded to Ecowitt Weather Server:**

- View current temperature data, history records and graph on the website.
- Receive email alerts from the server.
- Remote monitoring with smart phone, laptop, or computer by visiting the website.

# 3. Setup Guide

## 3.1 Installing battery

1. Remove the battery door on the back of the transmitter by removing the screw, as shown in Figure 2:

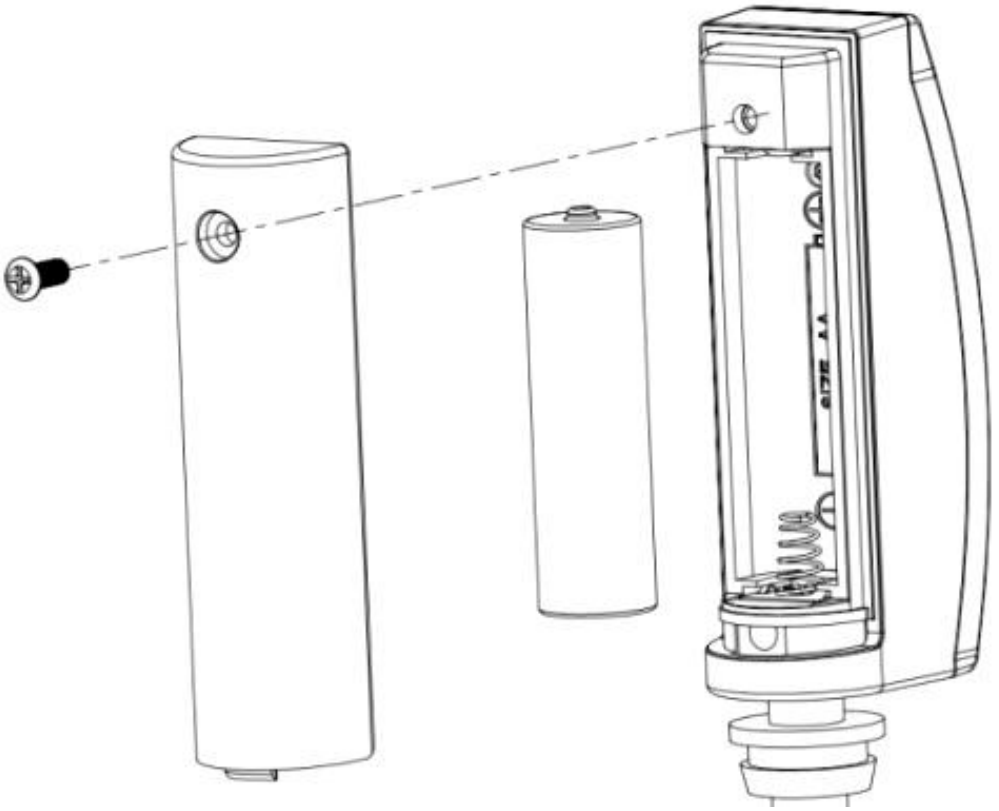


Figure 2: Battery installation

2. Insert one 1.5V AA battery (be aware of polarity: flat side of the battery goes to the spring side of the battery compartment).

The temperature reading will display on the LCD screen immediately and will normally update every 77 seconds (the sensor transmission update period).

Note: If there is no reading on the screen, make sure the battery is inserted the correct way or a proper reset happens. Make sure the battery is inserted correctly. Do not install the battery backward.

4. Close the battery door by installing the screw.

# 4. Sensor Placement

To mount the unit on a wall or wooden beam:

- Use a screw (Screw ST D3.2*M2.0*6) to fix the bracket on the wall, and then insert the probe through the hole of the bracket, as shown on figure 3-1:

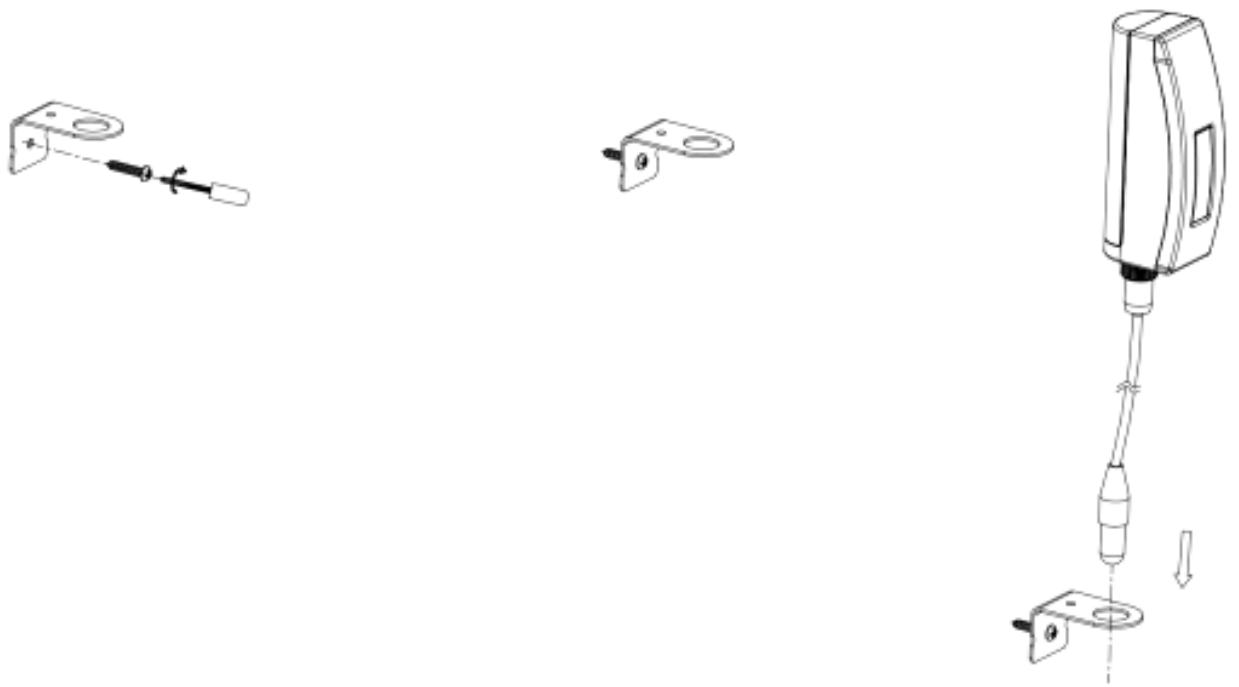

Figure 3-1: Sensor mounting

Fix the sensor to the bracket with the Hexagon M12 nut and tighten the screw as shown on figure 3-2: (hand turn the nut until firm, and then use a wrench to turn 1/3 ~ 1/2 turn and no more. Do not over tighten.)

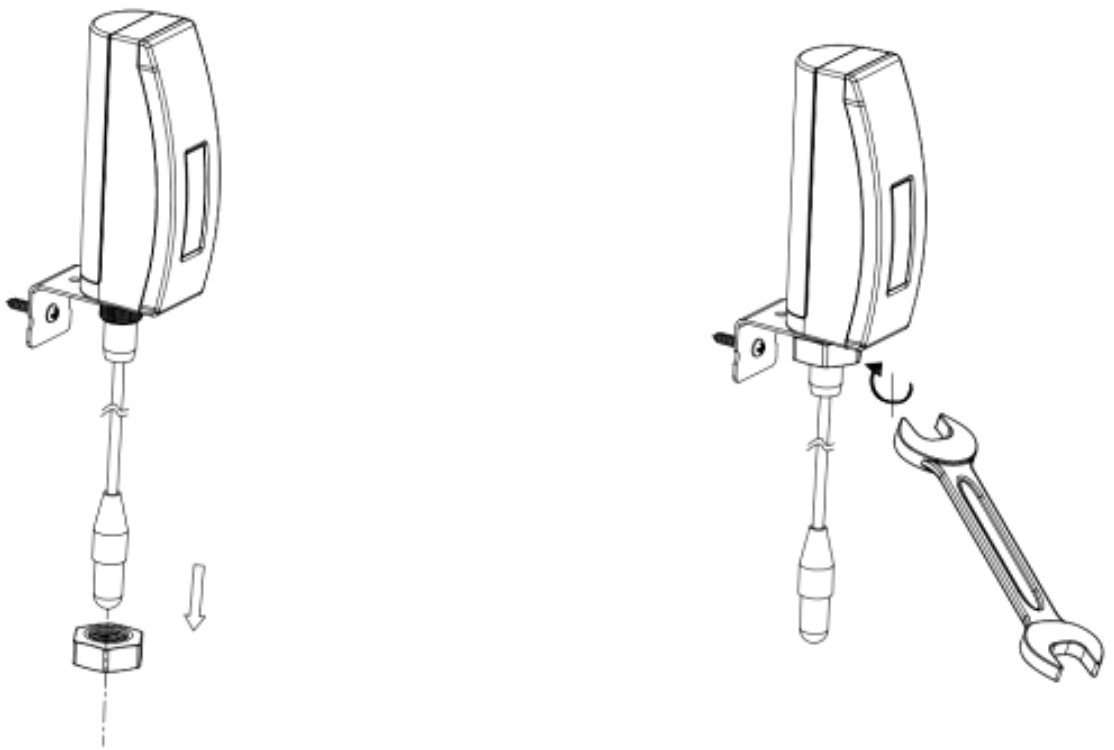

Figure 3-2: Sensor mounting

To mount the unit to a pole (not included) with the included hose clamp:

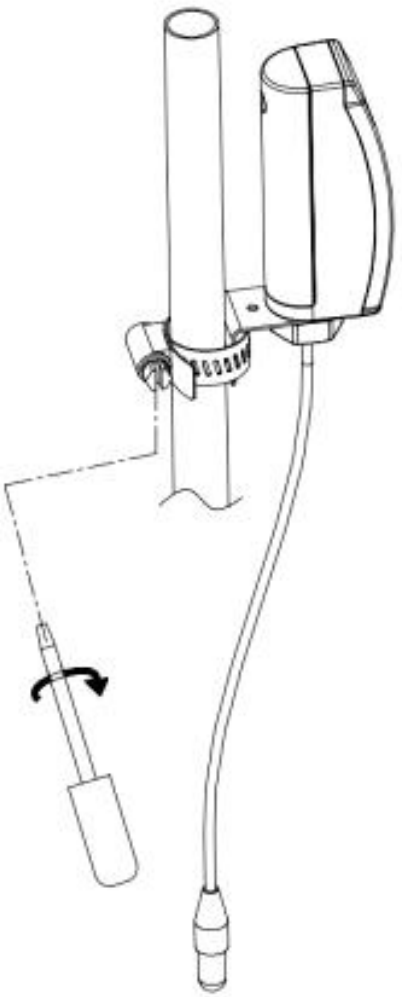

Figure 4: Sensor mounting to pole

Note:

Please don’t insert the sensor into corrosive liquids or hard rock to avoid any damage.

# 5. Wi-Fi Configuration with gateway

To view the sensor data on your mobile application and receive email alerts on our weather server, you need to pair this device with our GW1000/GW1100 Wi-Fi Gateway or HP2551/HP3500/HP3501 Weather Station (each sold separately).

## 5.1 Pair with Gateway

If the GW1000/GW1100 has been in operation, and you have never had any WN34 sensor setup before, just power up the sensor and GW1000/GW1100 will pick the sensor data automatically.

Note: The gateway can support a maximum of 8 WN34 temperature sensors. Each new sensor will be recognized as a new channel according to the Power-on sequence. You may attach a label to the channel on each sensor for distinction. The channel name can be edited both on the app and ecowitt.net (The edited name on the app will not sync to the ecowitt.net website, and it should be edited on your device setup page on ecowitt.net separately).

If you want to use a new WN34 sensor to replace the old one (already configured on certain channel), please try the following:

1. Open the Sensor ID page on the WS View app, and find your old sensor ID.

2. Power off the old sensor and power on the new sensor.

3. Click Re-register on the Sensor ID page.

Then the new sensor will be learned and the old sensor will be erased.

### 5.2 Wi-Fi Connection for the Gateway

For this part, please refer to the manual of the GW1000/GW1100 Wi-Fi gateway.

## 6. View Online Data with WS View

When the Wi-Fi configuration is done (to tell the gateway to be hooked to your Wi-Fi network), your sensor data as well as the sensor battery voltage information will be displayed on WS View App at the Live Data

page.

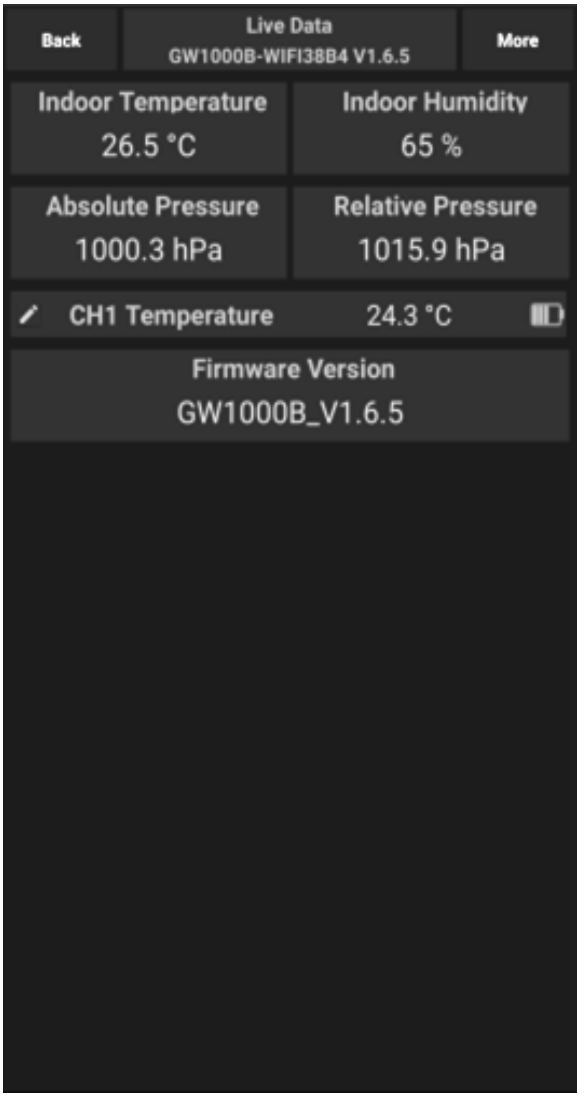


Note: It requires your phone and the gateway must be in the same network when viewing your sensor live data on the WS View app.

Live data refers to current data received by the gateway and is not stored on WS View app. However data is always pushed and saved on www.ecowitt.net cloud (under your registered account, and it can always be accessed via your browser.)

Detailed operation instructions can be found in the GW1000/GW1100 manual.

## 7. Set Email Alerts

Once your device is added successfully on the Ecowitt Weather server, you may set alerts for the sensor on the website to get email notifications.

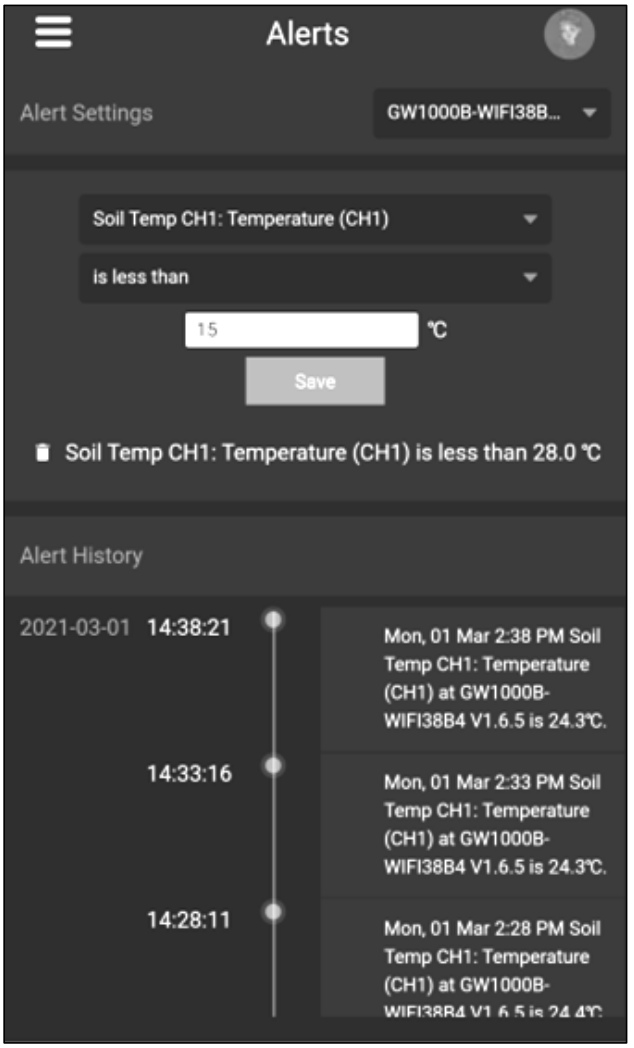


# 8.Specification

Power: 1x1.5V AA battery (not included)
Sensor type: Epoxy Sealed Thermistor of NTC
Frequency: 915 MHz
Wireless transmitting range: 100M (300feet)

Sensor reporting interval: 77 seconds
Sensing temperature: -40~60 °C(40~140 °F)

Cable sensor length: 3m (10ft)
Probe sensor length: 30cm (11.81inch)

Battery life: 12 months minimum

Waterproof level: IP65

# 9.W FCC Statement

**Statement according to FCC part 15.19:**

This device complies with part 15 of the FCC rules. Operation is subject to the following two conditions:

1. This device may not cause harmful interference.
2. This device must accept any interference received, including interference that may cause undesired operation.

**Statement according to FCC part 15.21:**

Modifications not expressly approved by this company could void the user's authority to operate the equipment.

**Statement according to FCC part 15.105:**

NOTE: This equipment has been tested and found to comply with the limits for a Class B digital device, pursuant to Part 15 of the FCC Rules. These limits are designed to provide reasonable protection against harmful

interference in a residential installation. This equipment generates, uses and can radiate radio frequency energy and, if not installed and used in accordance with the instructions, may cause harmful interference to radio communications.

However, there is no guarantee that interference will not occur in a particular installation. If this equipment does cause harmful interference to radio or television reception, which can be determined by turning the equipment off and on, the user is encouraged to try to correct the interference by one or more of the following measures:

- Reorient or relocate the receiving antenna.
- Increase the separation between the equipment and receiver.

- Connect the equipment into an outlet on a circuit different from that to which the receiver is connected.
- Consult the dealer or an experienced radio/TV technician for help.

To maintain compliance with FCC's RF Exposure guidelines, This equipment should be installed and operated with minimum distance between 20cm the radiator your body: Use only the supplied antenna.