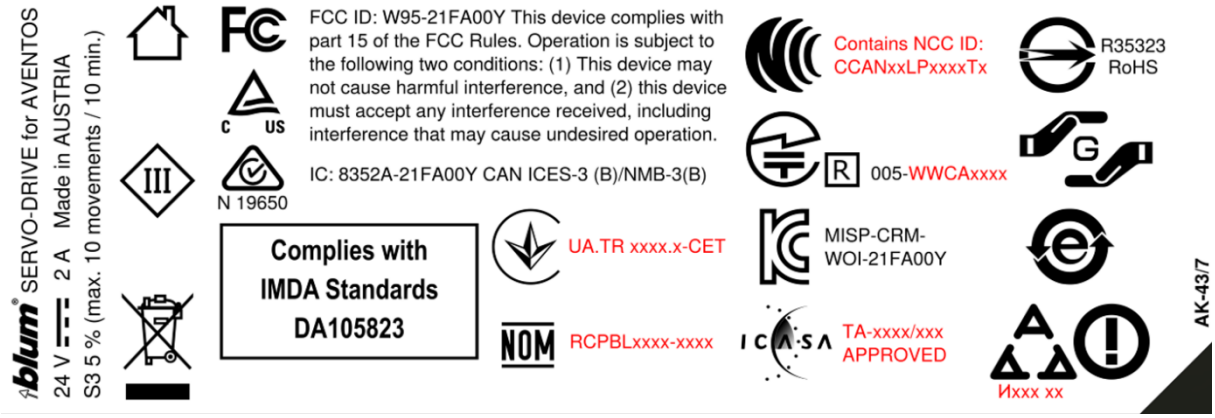
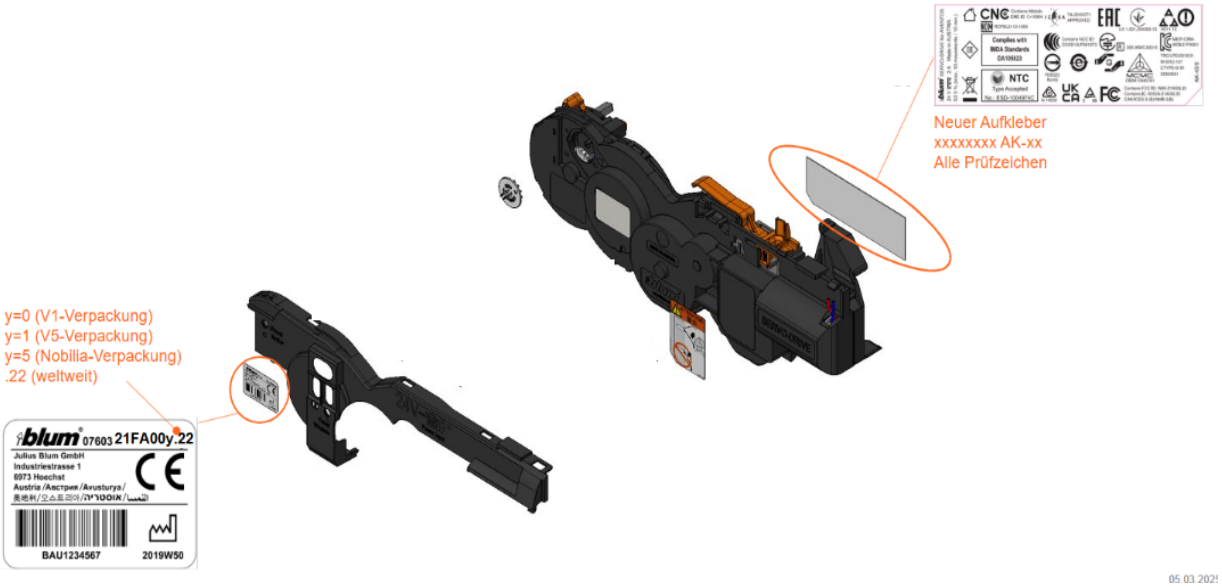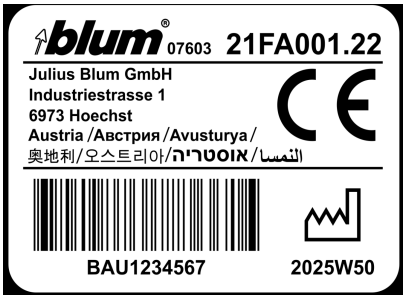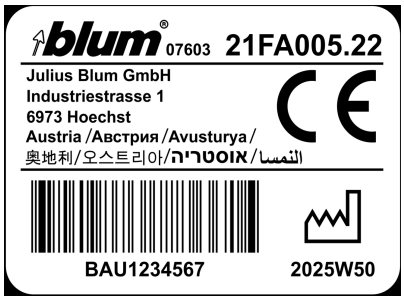
Label Location: