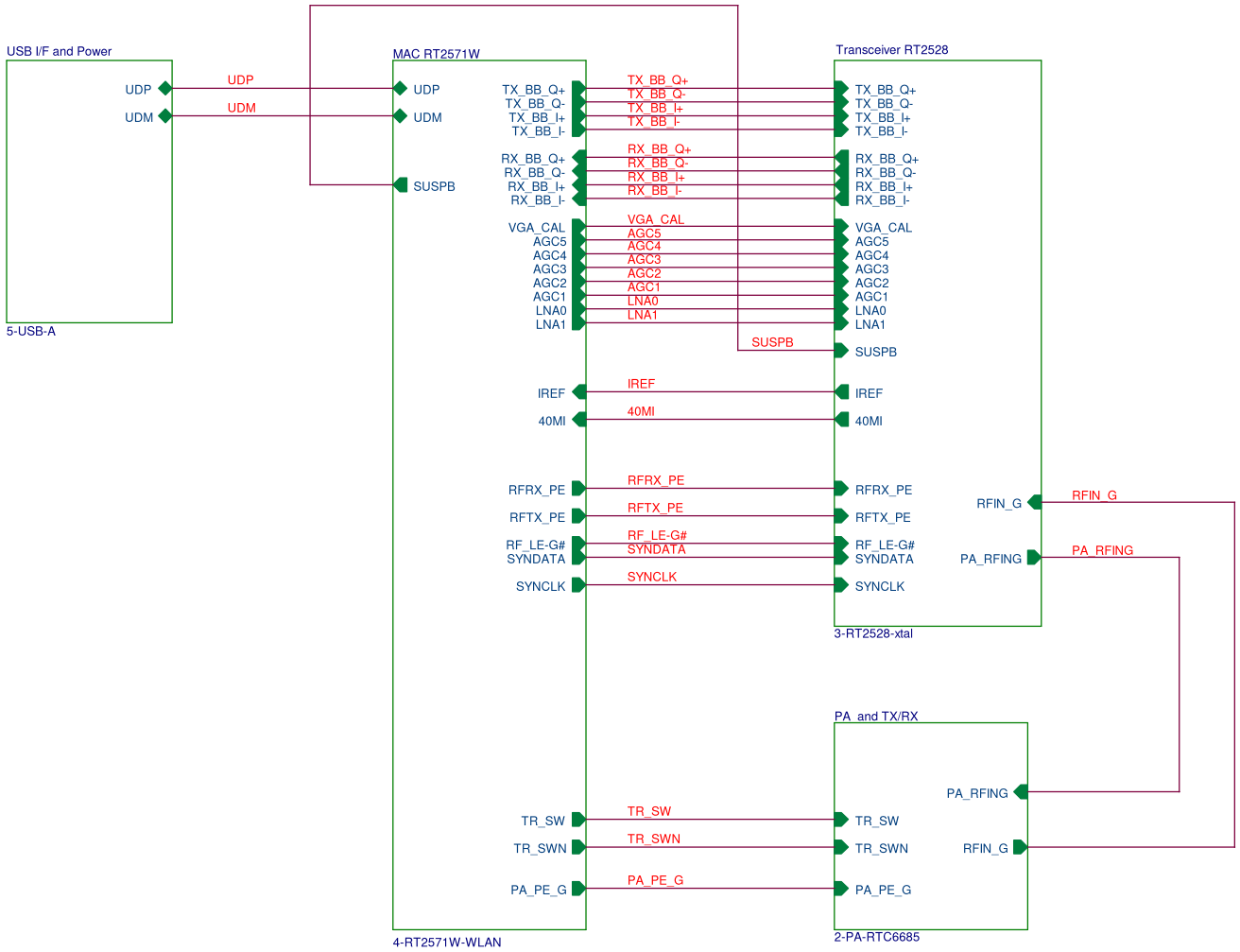
USB I/F and Power
UDP
UDM
5-USB-A
MAC RT2571W
UDP
UDM
SUSPB
TX_BB_Q+
TX_BB_Q-
TX_BB_I+
TX_BB_I-
RX_BB_Q+
RX_BB_Q-
RX_BB_I+
RX_BB_I-
VGA_CAL
AGC5
AGC4
AGC3
AGC2
AGC1
LNA0
LNA1
IREF
40MI
RFRX_PE
RFTX_PE
RF_LE-G#
SYNDATA
SYNCLK
TR_SW
TR_SWN
PA_PE_G
4-RT2571W-WLAN
Transceiver RT2528
TX_BB_Q+
TX_BB_Q-
TX_BB_I+
TX_BB_I-
RX_BB_Q+
RX_BB_Q-
RX_BB_I+
RX_BB_I-
VGA_CAL
AGC5
AGC4
AGC3
AGC2
AGC1
LNA0
LNA1
SUSPB
IREF
40MI
RFRX_PE
RFTX_PE
RF_LE-G#
SYNDATA
SYNCLK
RFIN_G
PA_RFING
3-RT2528-xtal
PA_and TX/RX
PA_RFING
TR_SW
TR_SWN
RFIN_G
PA_PE_G
2-PA-RTC6685

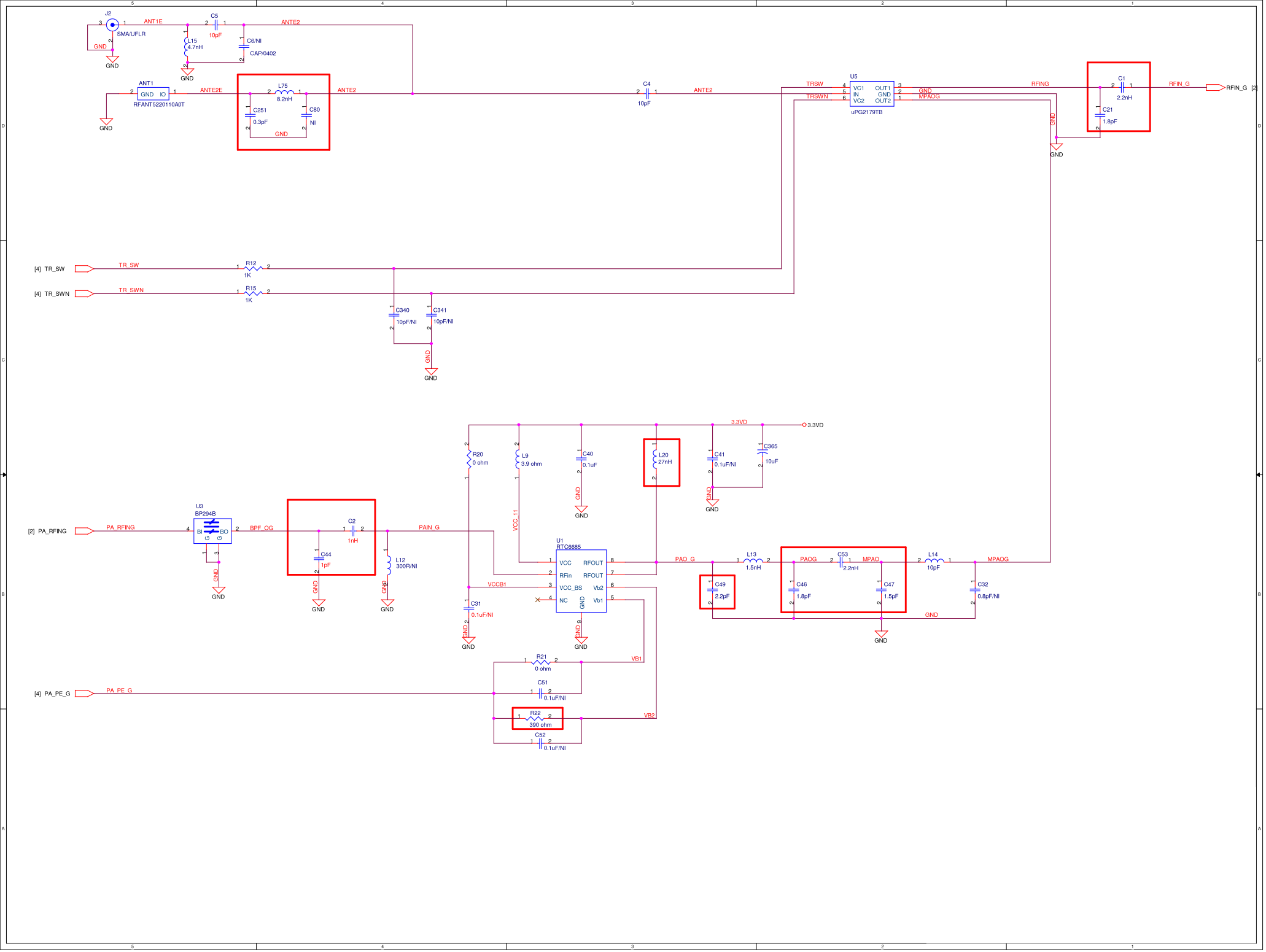
J2
SMA/UFLR
ANT1E
C5
10pF
ANTE2
L15
4.7nH
C6/NI
CAP/0402
GND
ANT1
GND IO
RFANT5220110A0T
ANTE2E
L75
8.2nH
C251
0.3pF
C80
NI
C4
10pF
U5
VC1 OUT1
IN GND
VC2 OUT2
uPG2179TB
TRSW
TRSWN
MPAOG
RFING
C1
2.2nH
C21
1.8pF
RFIN_G
[2] RFIN_G
[4] TR_SW
TR_SW
R12
1K
[4] TR_SWN
TR_SWN
R15
1K
C340
10pF/NI
C341
10pF/NI
3.3VD
R20
0 ohm
L9
3.9 ohm
C40
0.1uF
L20
27nH
C41
0.1uF/NI
C365
10uF
U3
BP294B
BI BO
[2] PA_RFING
PA_RFING
BPF_OG
C2
1nH
C44
1pF
PAIN_G
L12
300R/NI
VCC_11
U1
RTC6685
VCC RFOUT
RFin RFOUT
VCC_BS Vb2
NC Vb1
PAO_G
L13
1.5nH
C49
2.2pF
PAOG
C53
2.2nH
MPAO
C46
1.8pF
C47
1.5pF
L14
10pF
MPAOG
C32
0.8pF/NI
VCCB1
C31
0.1uF/NI
R21
0 ohm
VB1
C51
0.1uF/NI
[4] PA_PE_G
PA_PE_G
R22
390 ohm
VB2
C52
0.1uF/NI

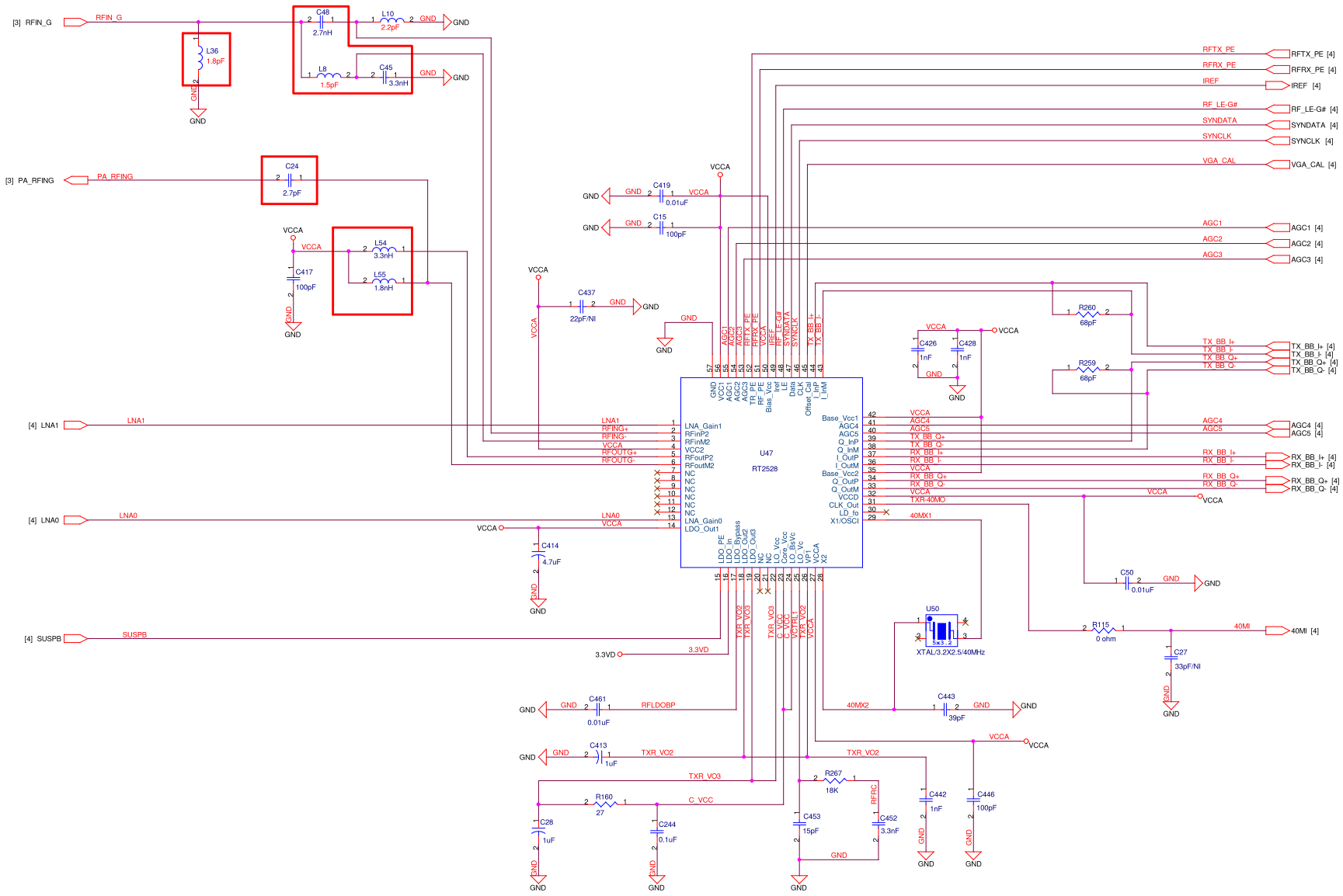
[3] RFIN_G
RFIN_G
L36
1.8pF
C48
2.7nH
L10
2.2pF
L8
1.5pF
C45
3.3nH
GND
[3] PA_RFING
PA_RFING
C24
2.7pF
VCCA
C417
100pF
L54
3.3nH
L55
1.8nH
C419
0.01uF
C15
100pF
C437
22pF/NI
[4] LNA1
LNA1
[4] LNA0
LNA0
[4] SUSPB
SUSPB
C414
4.7uF
3.3VD
U47
RT2528
LNA_Gain1
RFinP2
RFinM2
VCC2
RFoutP2
RFoutM2
LNA_Gain0
LDO_Out1
Base_Vcc1
AGC4
AGC5
Q_InP
Q_InM
I_OutP
I_OutM
Base_Vcc2
Q_OutP
Q_OutM
VCCD
CLK_Out
LD_fo
X1/OSCI
RFTX_PE
RFRX_PE
IREF
RF_LE-G#
SYNDATA
SYNCLK
VGA_CAL
AGC1
AGC2
AGC3
TX_BB_I+
TX_BB_I-
TX_BB_Q+
TX_BB_Q-
RX_BB_I+
RX_BB_I-
RX_BB_Q+
RX_BB_Q-
40MI
40MX1
40MX2
TXR-40MO
RFLDOBP
TXR_VO2
TXR_VO3
C_VCC
RFRC
R260
68pF
R259
68pF
C426
1nF
C428
1nF
C50
0.01uF
R115
0 ohm
C27
33pF/NI
U50
XTAL/3.2X2.5/40MHz
C461
0.01uF
C443
39pF
C413
1uF
R267
18K
R160
27
C28
1uF
C244
0.1uF
C453
15pF
C452
3.3nF
C442
1nF
C446
100pF

CNE
CONFIDENTIAL

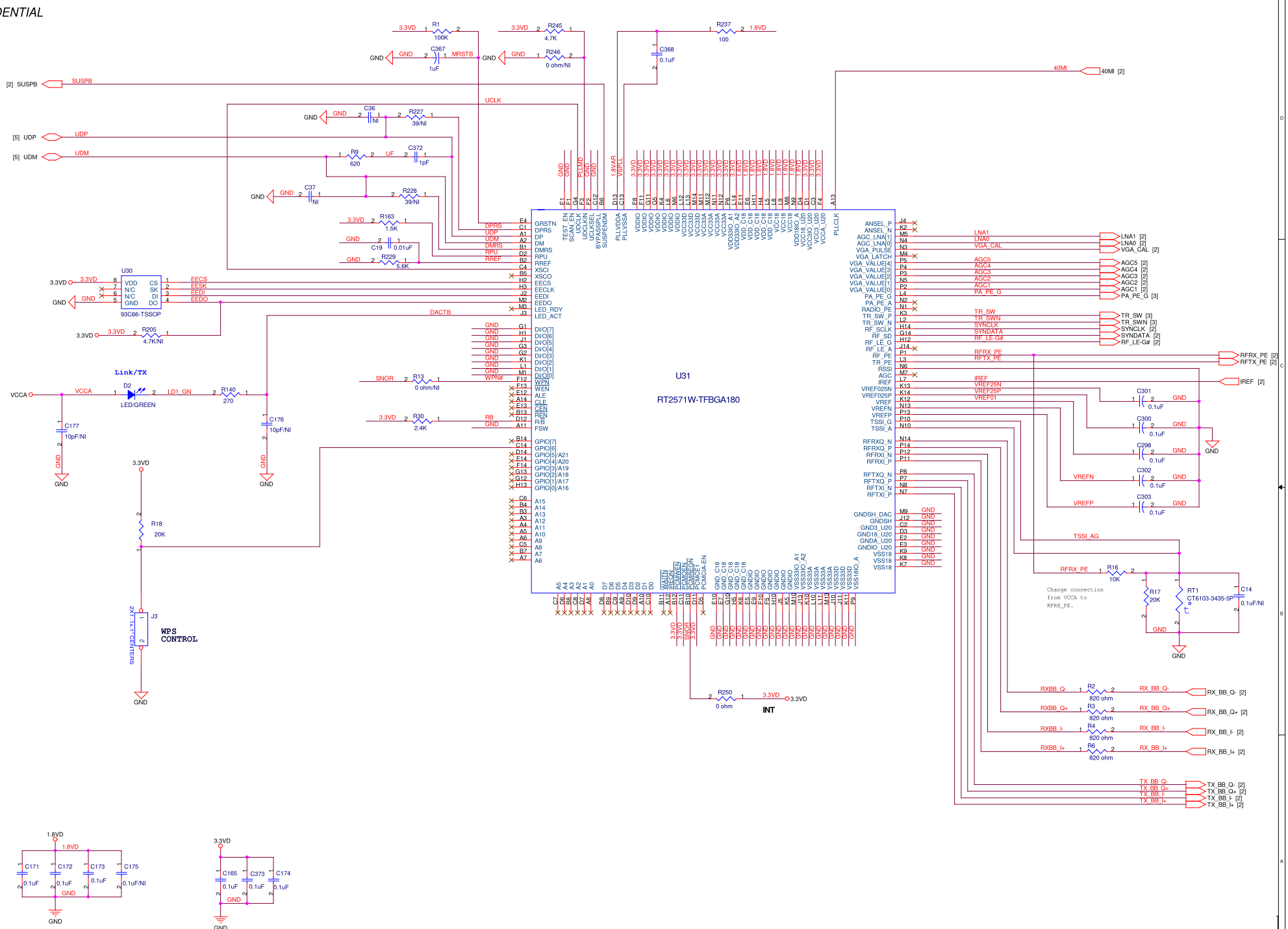

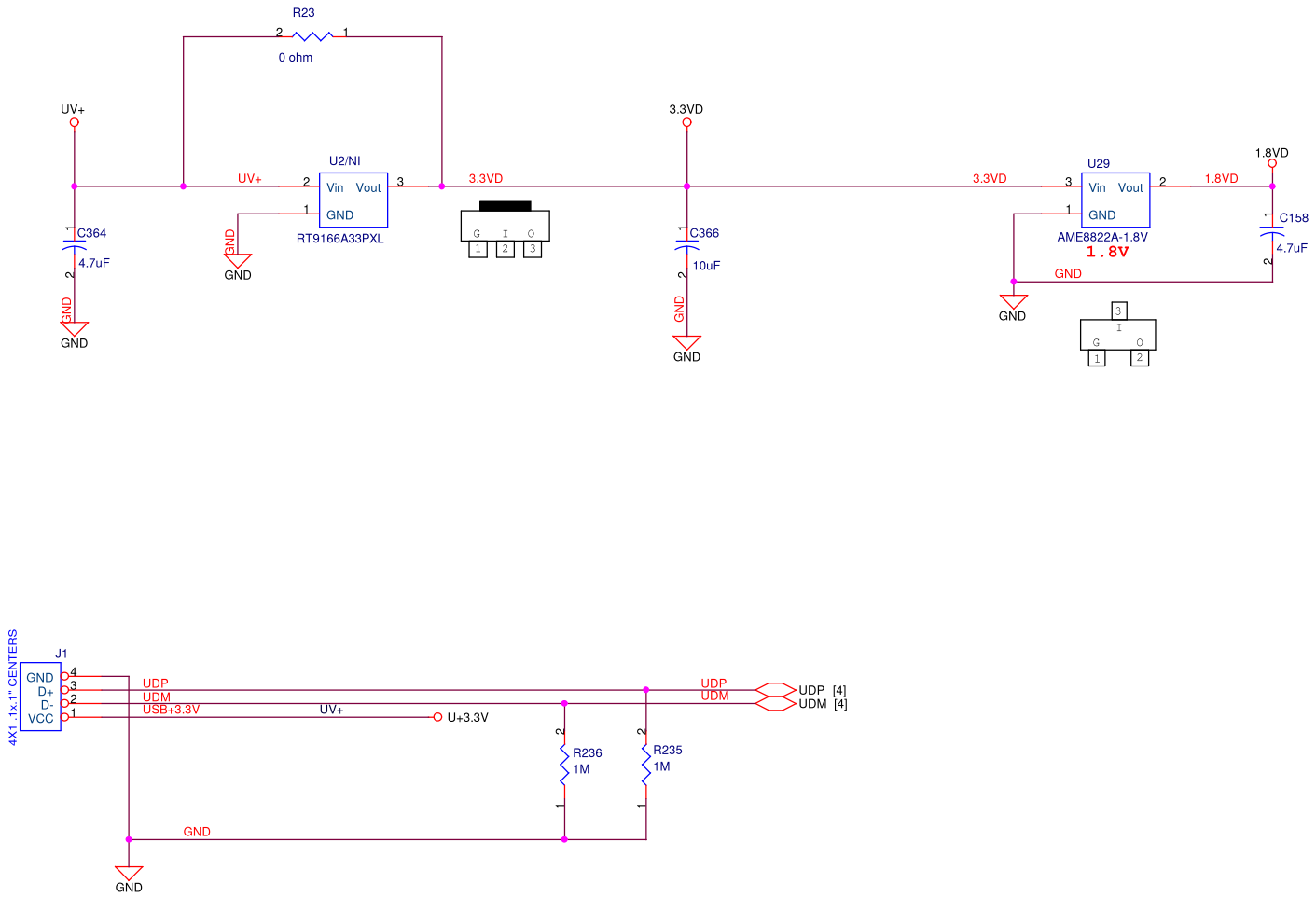
R23
0 ohm
UV+
U2/NI
Vin Vout
GND
RT9166A33PXL
3.3VD
C364
4.7uF
GND
C366
10uF
U29
AME8822A-1.8V
1.8V
1.8VD
C158
4.7uF
J1
4X1 .1x.1" CENTERS
GND
D+
D-
VCC
UDP
UDM
USB+3.3V
U+3.3V
R236
1M
R235
1M
UDP [4]
UDM [4]