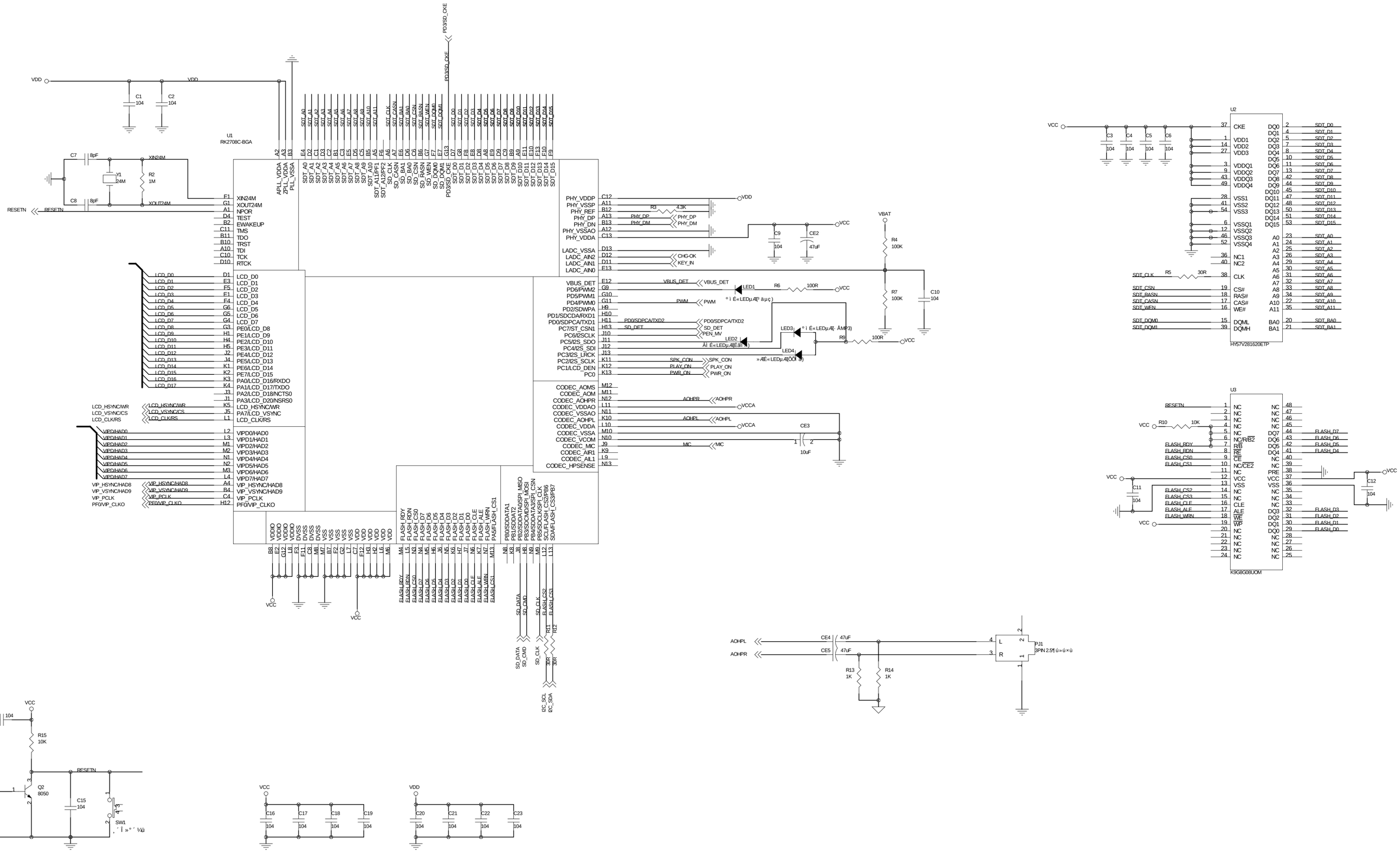
U1
RK2708C-BGA
U2
HY57V281620ETP
U3
K9G8G08U0M
VDD
VCC
VBAT
RESETN
XIN24M
XOUT24M
Y1
24M
R2
1M
C7
8pF
C8
8pF
C1
104
C2
104
C3
C4
C5
C6
104
R5
30R
R4
100K
R7
100K
C10
104
R3
4.3K
PHY_DP
PHY_DM
C9
104
CE2
47uF
CHG-OK
KEY_IN
VBUS_DET
LED1
R6
100R
PWM
LED2
LED3
LED4
R9
100R
PD0/SDPCA/TXD2
SD_DET
PEN_MV
SPK_CON
PLAY_ON
PWR_ON
LCD_HSYNC/WR
LCD_VSYNC/CS
LCD_CLK/RS
VIP_HSYNC/HAD8
VIP_VSYNC/HAD9
VIP_PCLK
PF0/VIP_CLKO
AOHPR
AOHPL
VCCA
CE3
10uF
MIC
R10
10K
C11
104
C12
104
FLASH_RDY
FLASH_RDN
FLASH_CS0
FLASH_CS1
FLASH_CS2
FLASH_CS3
FLASH_CLE
FLASH_ALE
FLASH_WRN
SDT_CLK
SDT_CSN
SDT_RASN
SDT_CASN
SDT_WEN
SDT_DQM0
SDT_DQM1
SD_DATA
SD_CMD
SD_CLK
R11
30R
R12
30R
I2C_SCL
I2C_SDA
AOHPL
AOHPR
CE4
47uF
CE5
47uF
R13
1K
R14
1K
J1
3PIN 2.5
C13
104
R15
10K
R16
220K
R18
1M
Q2
8050
C15
104
SW1
C16
C17
C18
C19
C20
C21
C22
C23
104

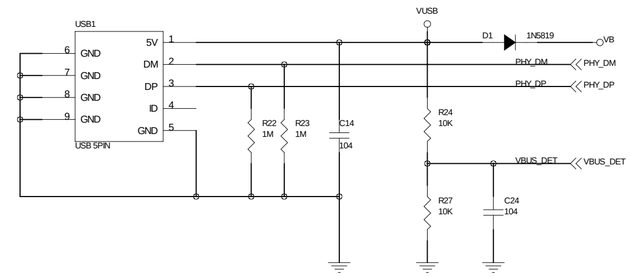
USB1
USB 5PIN
5V
DM
DP
ID
GND
VUSB
D1
1N5819
VB
PHY_DM
PHY_DP
R22
1M
R23
1M
C14
104
R24
10K
VBUS_DET
R27
10K
C24
104

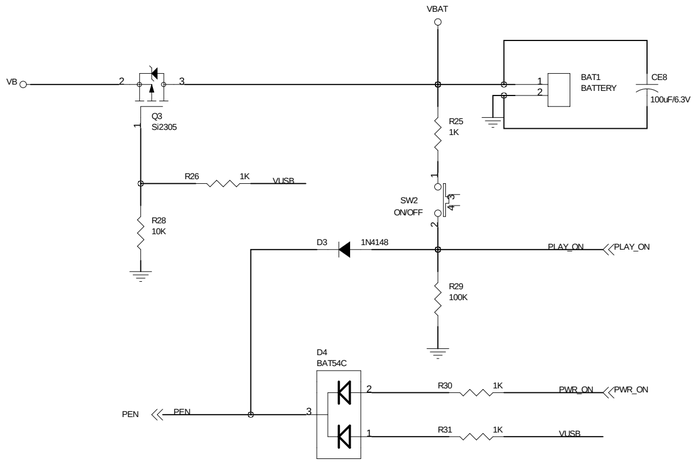
VBAT
VB
Q3
Si2305
R25
1K
BAT1
BATTERY
CE8
100uF/6.3V
R26
1K
VUSB
R28
10K
SW2
ON/OFF
D3
1N4148
PLAY_ON
R29
100K
D4
BAT54C
PEN
R30
1K
PWR_ON
R31
1K
VUSB

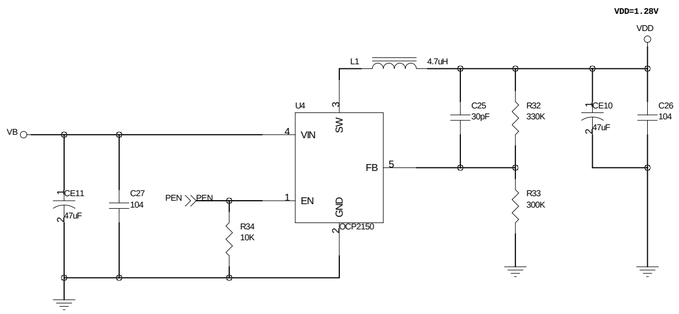
VDD=1.28V
VDD
L1
4.7uH
U4
VIN
SW
FB
EN
GND
OCP2150
VB
CE11
47uF
C27
104
PEN
R34
10K
C25
30pF
R32
330K
R33
300K
CE10
47uF
C26
104

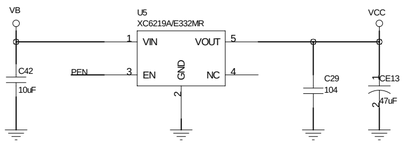
VB
U5
XC6219A/E332MR
VIN
VOUT
EN
GND
NC
VCC
C42
10uF
PEN
C29
104
CE13
47uF

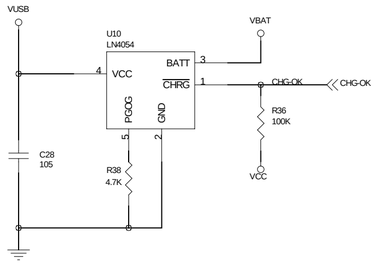
VUSB
U10
LN4054
VCC
BATT
CHRG
PGOG
GND
VBAT
CHG-OK
R36
100K
VCC
C28
105
R38
4.7K

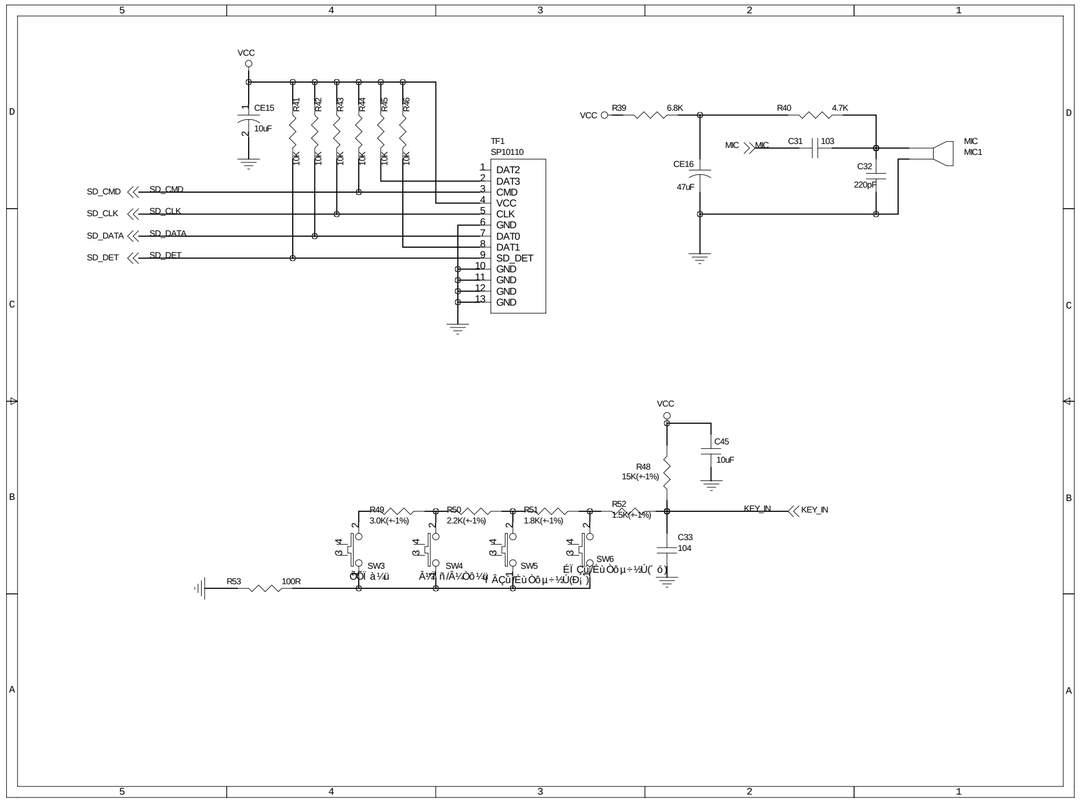
VCC
CE15
10uF
R41
R42
R43
R44
R45
R46
10K
TF1
SP10110
SD_CMD
SD_CLK
SD_DATA
SD_DET
DAT2
DAT3
CMD
VCC
CLK
GND
DAT0
DAT1
SD_DET
GND
GND
GND
GND
R39
6.8K
R40
4.7K
MIC
C31
103
CE16
47uF
C32
220pF
MIC
MIC1
VCC
C45
10uF
R48
15K(+-1%)
R49
3.0K(+-1%)
R50
2.2K(+-1%)
R51
1.8K(+-1%)
R52
1.5K(+-1%)
KEY_IN
KEY_IN
C33
104
SW3
SW4
SW5
SW5
R53
100R

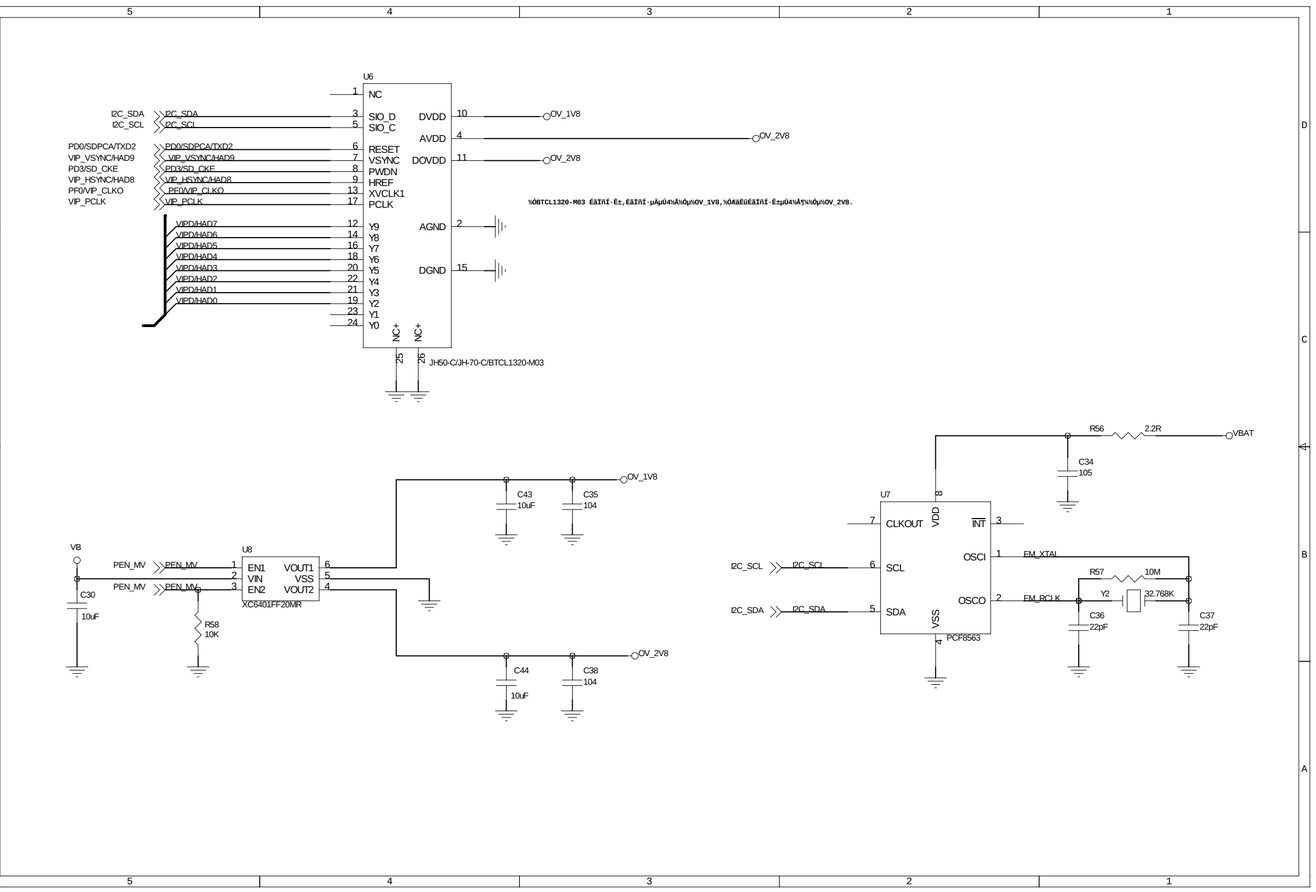
U6
NC
SIO_D
SIO_C
RESET
VSYNC
PWDN
HREF
XVCLK1
PCLK
Y9
Y8
Y7
Y6
Y5
Y4
Y3
Y2
Y1
Y0
NC+
NC+
DVDD
AVDD
DOVDD
AGND
DGND
I2C_SDA
I2C_SCL
PD0/SDPCA/TXD2
VP_VSYNC/HAD9
PD3/SD_CKE
VP_HSYNC/HAD8
PF0/VP_CLKO
VP_PCLK
VPD/HAD7
VPD/HAD6
VPD/HAD5
VPD/HAD4
VPD/HAD3
VPD/HAD2
VPD/HAD1
VPD/HAD0
OV_1V8
OV_2V8
JH50-CJH-70-C/BTCL1320-M03
R56
2.2R
VBAT
C34
105
U7
CLKOUT
VDD
INT
SCL
SDA
OSCI
OSCO
VSS
PCF8563
EM_XTAI
EM_RCLK
R57
10M
Y2
32.768K
C36
22pF
C37
22pF
VB
C30
10uF
PEN_MV
R58
10K
U8
EN1
VIN
EN2
VOUT1
VSS
VOUT2
XC6401FF20MR
C43
10uF
C35
104
C44
10uF
C38
104