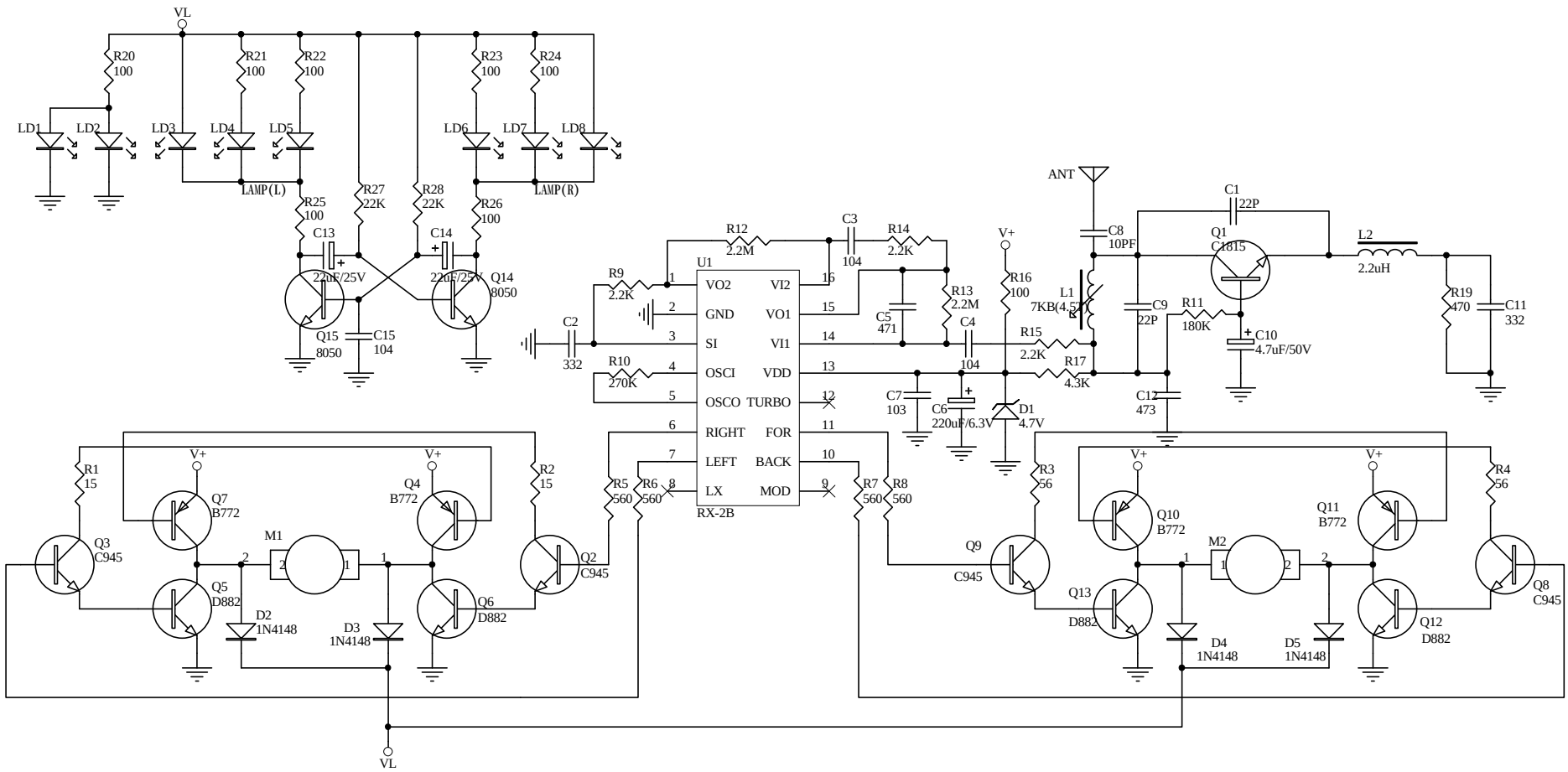

Title	Monster Spin Car Receiver(49MHZ)	
Size A4	Number	Revision A
Date: 26-Feb-2009		Sheet of 2/2
File: D:\新建文件夹\RX2B.ddb		Drawn By: Deyuan Li

PDF 文件以 "FinePrint pdfFactory Pro" 试用版创建 http://www.pdffactory.com