SYM.	REV.	DESCRIPTION	DRAWN	APPROVED	DATE

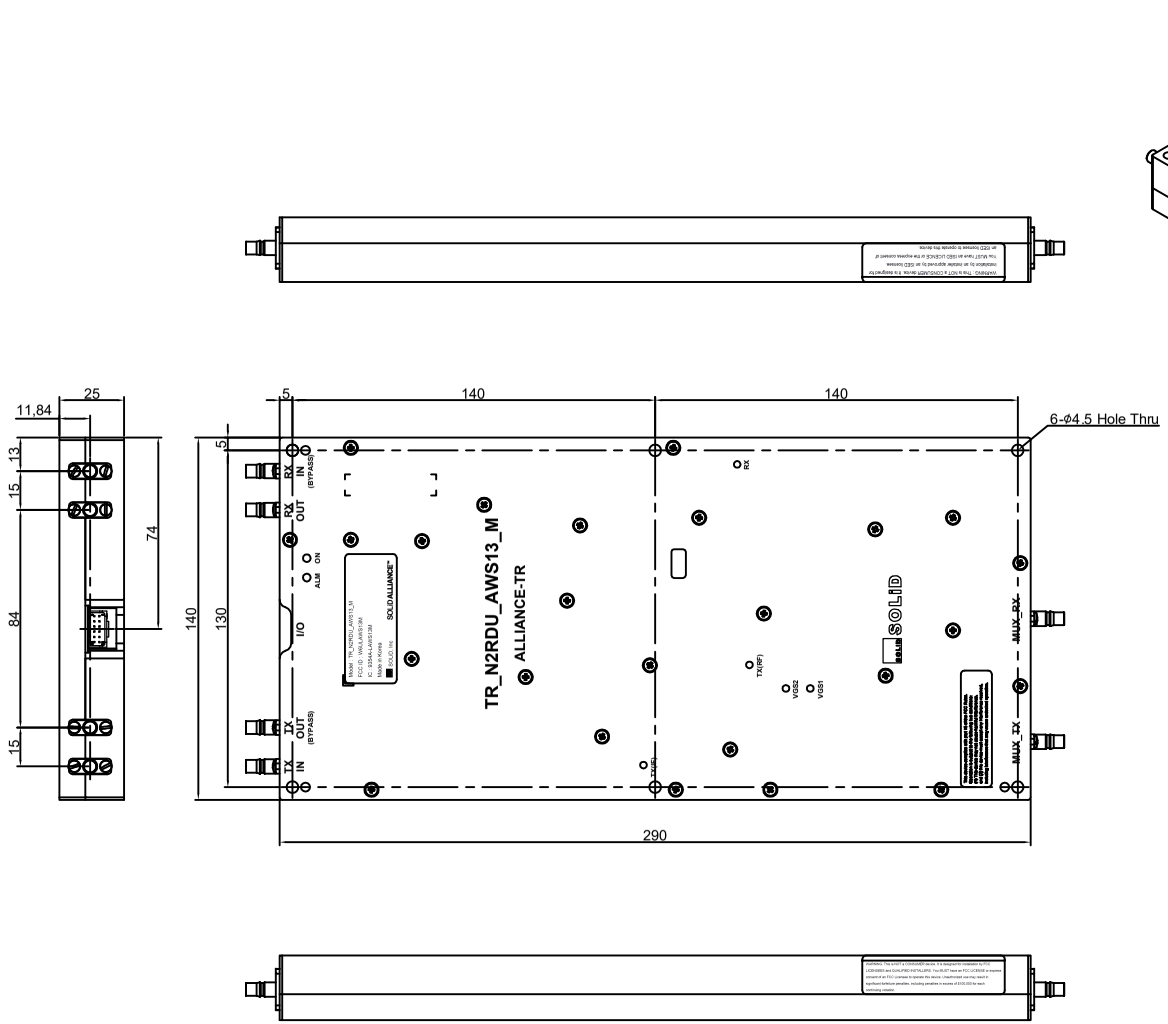

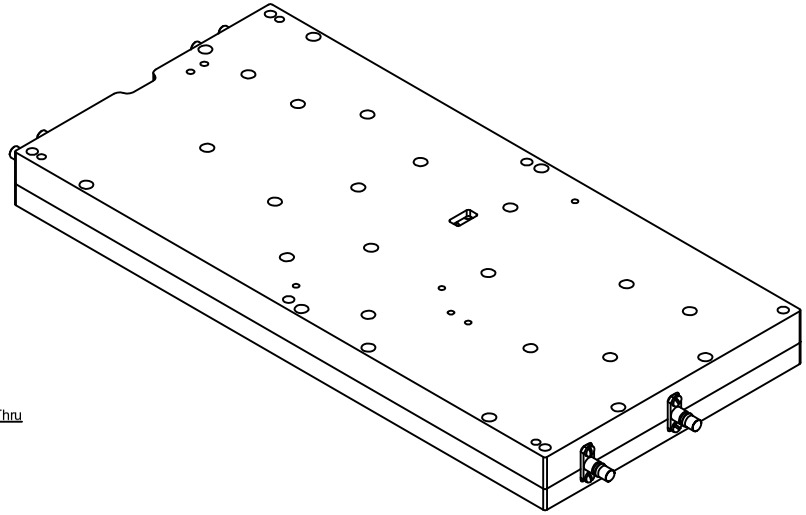

APPROVALS		
DRAWN MA.KIM	CHECKED	APPROVED JY.MAENG
Q'TY/SET 1SET	WEIGHT	DATE 2019-10-28

Korea RF

TITLE

외형도

KIS2135-70LS-RNG

DIMENSIONAL ALLOWANCE (mm)	
DIVISION	TOLERANCE
GENERAL TAP DP	±0.1 ±0.1
STRAIGHTNESS & FLATNESS (mm)	
DIVISION	TOLERANCE
~ 150	±0.1
150~300	±0.2
300~1000	±0.3

MATERIAL: AL6061, AL5052

FINISH: White Chromate (Cr3+), Electrolysis Nickel Anode

UNLESS OTHERWISE SPECIFIED : DIMENSION ARE IN MM

TOLERANCE: DECIMAL ±0.1, ANGULAR ±0.1

SCALE 1:1

Trigonometry

SIZE A1

ERP Code : -

Model : THOR N2RDU Assy