Option_5
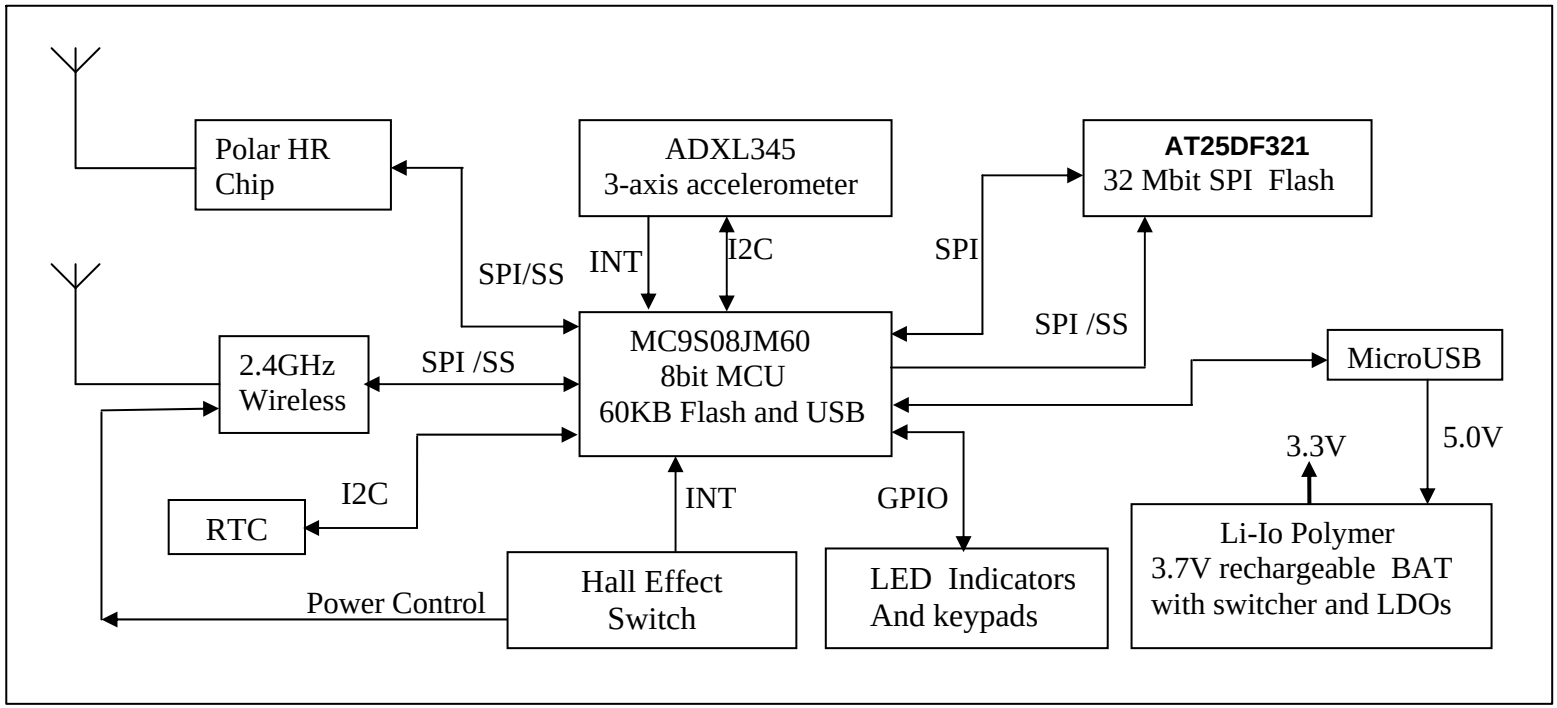
Freescale MCU with Hall Effect Switch