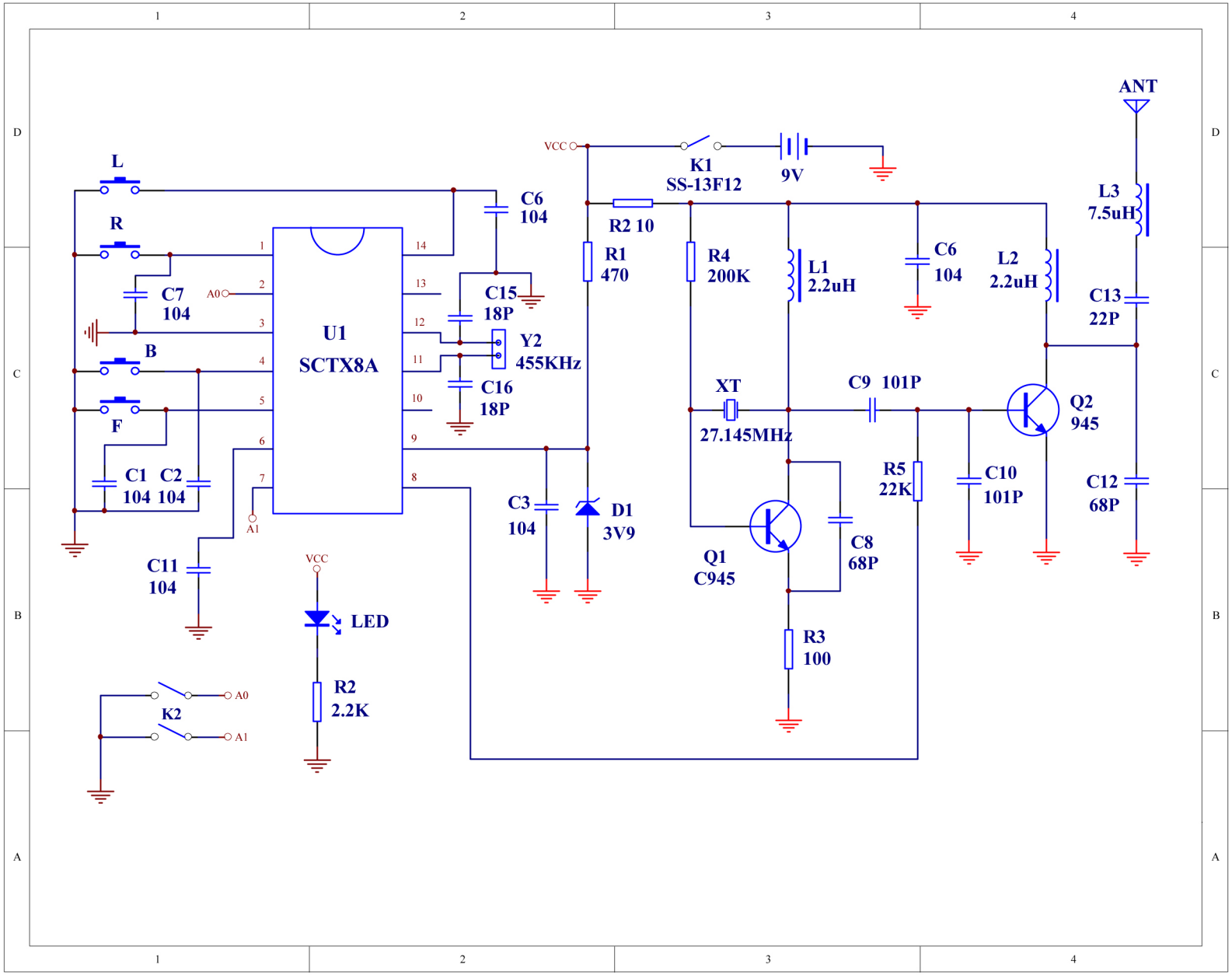
ANT
VCC
K1
SS-13F12
9V
L
R
B
F
C6
104
R2 10
R1
470
R4
200K
L1
2.2uH
C6
104
L2
2.2uH
L3
7.5uH
C13
22P
C7
104
A0
U1
SCTX8A
C15
18P
Y2
455KHz
C16
18P
XT
27.145MHz
C9 101P
Q2
945
C1 C2
104 104
A1
C3
104
D1
3V9
R5
22K
C10
101P
C12
68P
C11
104
Q1
C945
C8
68P
VCC
LED
R3
100
R2
2.2K
K2
A0
A1