A2637 800CPI SCH

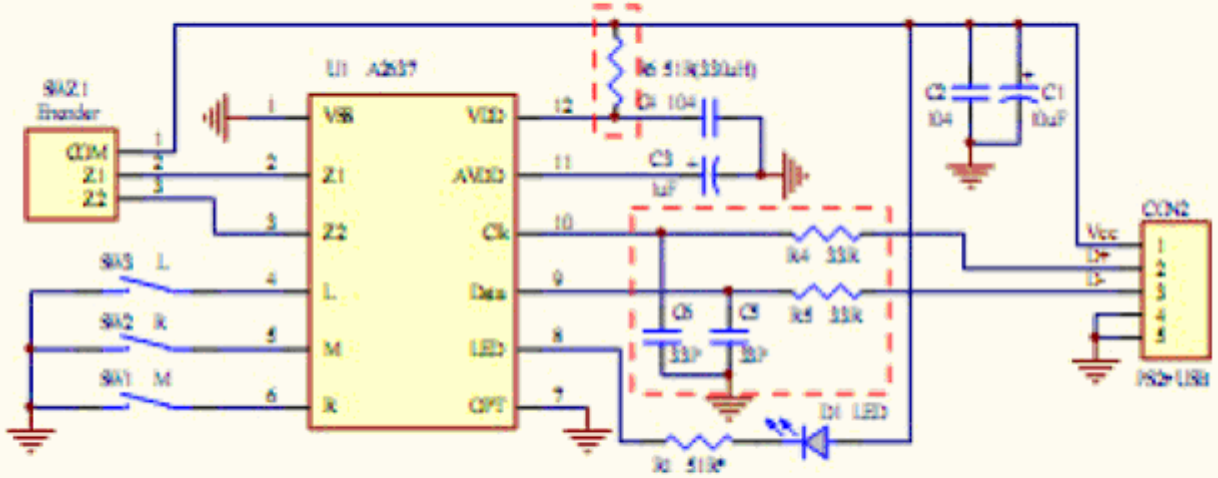

NOTE: R4 R5 R6 C5 C6 can not to improve EM and EFT, if consumer not need, R4~R6 can use jumper and delete C5 and C6.

CLK 24MHz