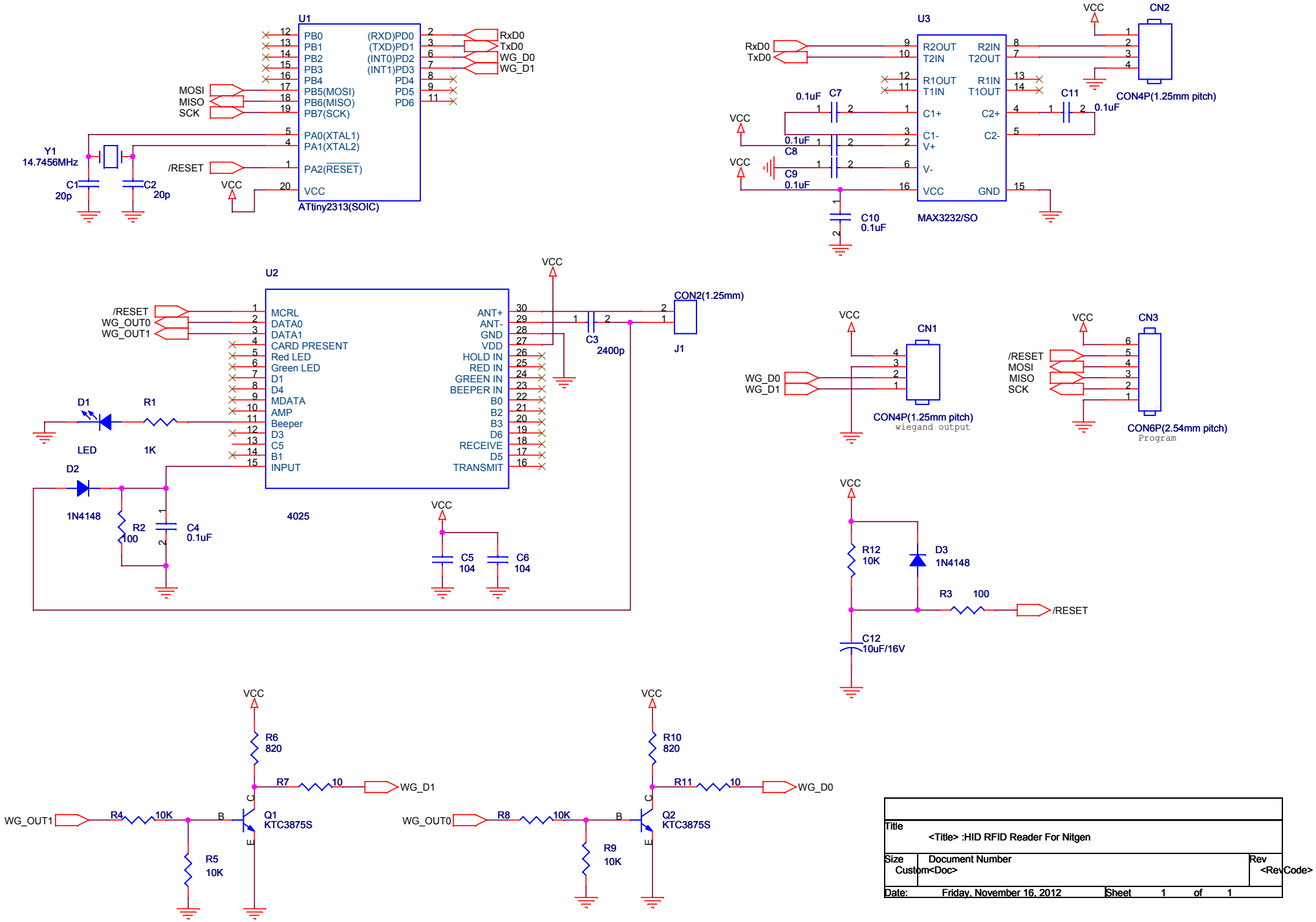
U1
PB0
PB1
PB2
PB3
PB4
PB5(MOSI)
PB6(MISO)
PB7(SCK)
PA0(XTAL1)
PA1(XTAL2)
PA2(RESET)
VCC
(RXD)PD0
(TXD)PD1
(INT0)PD2
(INT1)PD3
PD4
PD5
PD6
ATtiny2313(SOIC)
MOSI
MISO
SCK
/RESET
RxD0
TxD0
WG_D0
WG_D1
Y1
14.7456MHz
C1
20p
C2
20p
U3
R2OUT
T2IN
R1OUT
T1IN
C1+
C1-
V+
V-
R2IN
T2OUT
R1IN
T1OUT
C2+
C2-
GND
MAX3232/SO
C7
0.1uF
C8
0.1uF
C9
0.1uF
C10
0.1uF
C11
0.1uF
CN2
CON4P(1.25mm pitch)
U2
MCRL
DATA0
DATA1
CARD PRESENT
Red LED
Green LED
D1
D4
MDATA
AMP
Beeper
D3
C5
B1
INPUT
ANT+
ANT-
GND
VDD
HOLD IN
RED IN
GREEN IN
BEEPER IN
B0
B2
B3
D6
RECEIVE
D5
TRANSMIT
4025
C3
2400p
CON2(1.25mm)
J1
D1
LED
R1
1K
D2
1N4148
R2
100
C4
0.1uF
C5
104
C6
104
CN1
CON4P(1.25mm pitch)
wiegand output
CN3
CON6P(2.54mm pitch)
Program
R12
10K
D3
1N4148
R3
100
C12
10uF/16V
R6
820
R7
10
R4
10K
R5
10K
Q1
KTC3875S
WG_OUT1
R10
820
R11
10
R8
10K
R9
10K
Q2
KTC3875S
WG_OUT0
Title
<Title> :HID RFID Reader For Nitgen
Size
Custom
Document Number
<Doc>
Rev
<RevCode>
Date: Friday, November 16, 2012
Sheet 1 of 1