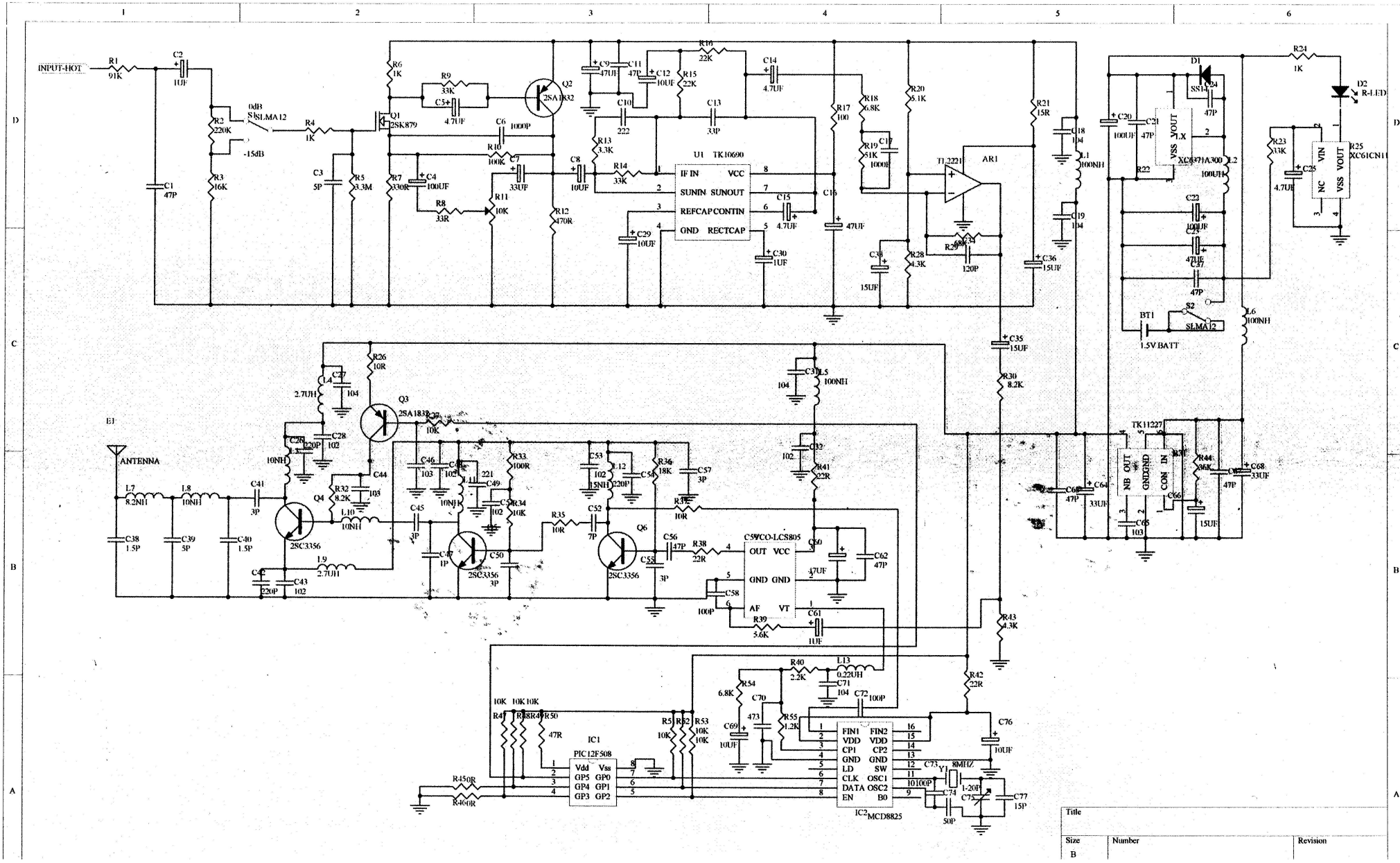
INPUT-HOT
R1 91K
C2 10UF
C1 47P
R2 220K
R3 16K
0dB
S1 SLMA12
-15dB
R4 1K
Q1 2SK879
R6 1K
R9 33K
C5 4.7UF
C6 1000P
Q2 2SA1832
R10 100K
C7 33UF
R11 10K
R8 33R
C3 5P
R5 3.3M
R7 330R
C4 100UF
R12 470R
C9 47UF
C11 47P
C12 10UF
R16 22K
R15 22K
C10 222
C13 3P
R13 3.3K
C8 10UF
R14 33K
U1 TK10690
IF IN
VCC
SUNIN
SUNOUT
REFCAP
CONTIN
GND
RECTCAP
C29 10UF
C15 4.7UF
C30 1UF
C14 4.7UF
C16 47UF
R17 100
R18 6.8K
R19 51K
C17 1000P
R20 5.1K
R21 15R
T1 2221
AR1
R28 4.3K
R29 68K
120P
C36 15UF
C18 104
L1 100NH
C19 104
R24 1K
D1 SS14
47P
D2 R-LED
C20 100UF
C21 47P
R22
XC6371A300
VOUT
LX
VSS
100UH
R23 33K
C25 4.7UF
R25 XC61CN11
VIN
NC
VSS
VOUT
C22 100UF
C24 47UF
C27 47P
S2 SLMA12
BT1 1.5V BATT
L6 100NH
C35 15UF
R30 8.2K
R26 10R
L4 2.7UH
C27 104
Q3 2SA1838
R37 10K
C28 220P
C26 1.5P
10NH
C44 103
ANTENNA
E1
L7 8.2NH
L8 10NH
C41 3P
Q4 2SC3356
R32 8.2K
L10 10NH
C38 1.5P
C39 5P
C40 1.5P
L9 2.7UH
C42 220P
C43 102
C46 103
C48 102
L11 221
C49 102
R33 100R
R34 10K
C45 3P
C47 1P
C50 3P
2SC3356
R35 10R
C52 7P
Q6
2SC3356
C53 102
15NH
L12 220P
C54
R36 18K
C57 3P
R37 10R
C56 47P
R38 22R
C55 3P
C59 VCO-LCS805
OUT
VCC
GND
GND
AF
VT
C60 47UF
C62 47P
C58 100P
R39 5.6K
C61 1UF
C31 104
L5 100NH
C32 102
R41 22R
TK11227
NB OUT
GND
GND
CON IN
C63 47P
C64 33UF
C65 103
R44 36K
C66 15UF
C68 33UF
47P
R43 4.3K
R42 22R
R40 2.2K
L13 0.22UH
C71 104
C72 100P
R54 6.8K
C70 473
R55 1.2K
C69 10UF
10K 10K 10K
R47 R48 R49 R50
47R
IC1 PIC12F508
Vdd
Vss
GP5
GP0
GP4
GP1
GP3
GP2
R51 R52 R53
10K 10K 10K
R450R
R460R
IC2 MCD8825
FIN1
FIN2
VDD
VDD
CP1
CP2
GND
GND
LD
SW
CLK
OSC1
DATA
OSC2
EN
B0
C76 10UF
C73 8MHZ
Y1
C74 50P
C75 1-20P
C77 15P
Title
Size
B
Number
Revision