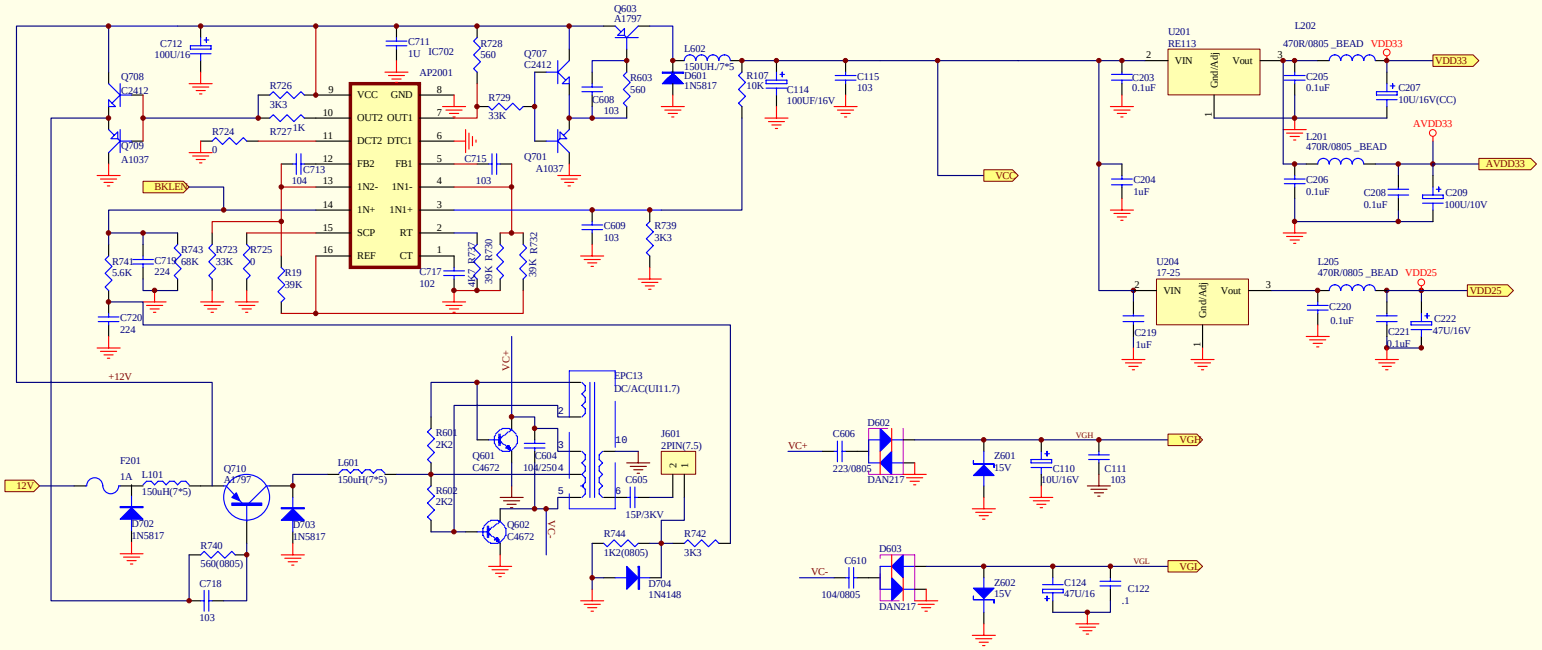

Organization:	XINJIUDING OPTRONICS TECHNOLOGIES CO.LTD		
Address:	Addr:South 2/F,Minlida Industry Park,Honghualing District,Xinli,NanShan District,Shenzhen City,China		
Document Title	LV35PVI.Sch		
Document NO:	Power	REV: 1.01	Size: B
Drawn By:		Proof:	Auditing:
FILE:	F:\2008\DSN\LV35PVI—R1.02.ddb - Documents\POWER.Sch		
TIME: 15:16:00	DATE: 2-Jul-2008	Sheet: 2 of 3	