REV.	MARK	ECR/ECN NO.	DATE	UPDATE DESCRIPTION	SIGNATURE
0	N/A	N/A	2022/07/26	First release	David Kuo

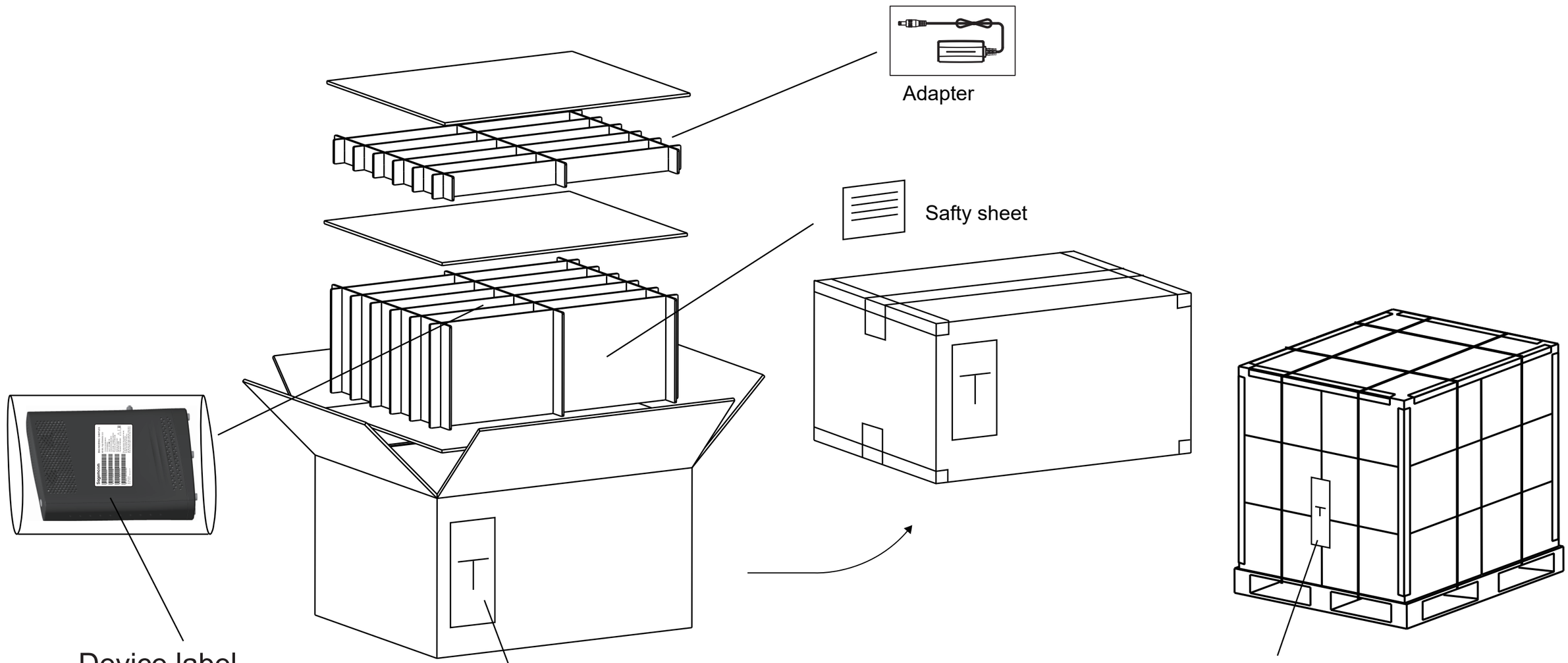

標籤製作粘貼方式/ F06C001.00/03/01 of 05

MATERIAL (SPEC.)

FINISH

Select

Dim. \ Tol.	A	B	C	EPS	EPE	BAG	CTN	Label	USR
0~6	0.05	0.05	0.10					0.20	
6~30	0.10	0.15	0.20	0.50	0.50	3.00		0.20	
30~120	0.15	0.20	0.30	0.50	0.50	5.00	2.00	0.25	
120~300	0.20	0.30	0.40	1.00	1.00	10.00	3.00	0.30	
300~450	0.25	0.40	0.50	2.00	2.00	15.00	5.00	0.50	
450~600	0.30	0.50	0.60	3.00	3.00	20.00	5.00	0.80	
DRAFT TOLERANCE			±0.2°	CRITICAL DIM. MARK					*

SCALE

SHEET

UNIT mm

SIZE A4

Foxconn Industrial Internet 富士康工业互联网

PART NAME: SGC F06C001.01 packaging proposal

MODEL	PART NO.	DESIGNED
SGC F06C001.01	N/A	David Kuo
CUSTOMER MODEL	CUSTOMER PART NO.	APPROVED
SGC F06C001.01	N/A	Bailey Tan

REV.	MARK	ECR/ECN NO.	DATE	UPDATE DESCRIPTION	SIGNATURE
00			2022/07/26	First offical release	David Kuo
01					

For F@ST3896 SUM COGECO

Device label

ID LABEL : 503.01834.005
(82*50mm)

Sagemcom logo Height: 6mm

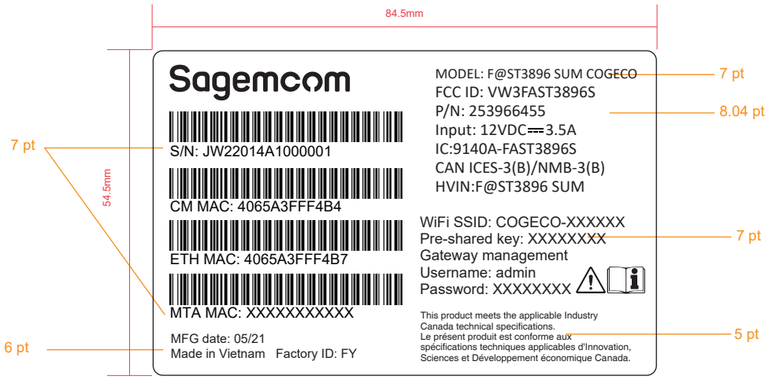

1. Serial number constitution

By definition, a serial number is unique. It is forbidden to use twice the same serial number, whether it is for products, gift boxes, outer boxes or pallets, and even for two different models. See examples below.

1-1. S/N

The product serial number 15 digits, for example JW22014A1000001

- JW: It is the production site code for Fii (Created by Sagemcom)
- 22: Year
- 014: Production Date (001 = 1st January; 365 or 366 = 31st December)
- A1: Code for the product to be determined by Sagemcom for each product range, knowing that:
  A1 is the code raised for product SUM COGECO
- 000001: counter (6 digits, from 000001 to 999999).

NB: these 6 last digits must be reset at each new production date and must be different in case of several product codes are produced the same day.

Barcode Code Symbology: Code 128
Bar Code Dimensions: Minimum width of 40mm,
Minimum heigh of 5mm
Font: Arial 7pt
Redundant serial numbers are forbidden and would cause rework costs to be paid by Fii.

2 CM MAC: Please see the table for CM MAC
Barcode Code Symbology: Code 128
Bar Code Dimensions: Minimum width of 40mm,
Minimum heigh of 5mm
Font: Arial 7pt

CM MAC range: F8084FF8EC48 - F8084FF8EFFF
F08175BCD1D0 - F08175BCD3B7

Example: F8084FF8EE18

3. ETH MAC: Please see the table for ETH MAC
Barcode Code Symbology: Code 128
Bar Code Dimensions: Minimum width of 40mm,
Minimum heigh of 5mm
Font: Arial 7pt

MTA MAC range = CM MAC range +4
Example: F8084FF8EE1B

4. MTA MAC:Please see the table for MTA MAC
Barcode Code Symbology: Code 128
Bar Code Dimensions: Minimum width of 40mm,
Minimum heigh of 5mm
Font: Arial 7pt

MTA MAC range = CM MAC range +3
Example: F8084FF8EE1C

5. MFG Date
MM/YY, for example: 05/21
Font: Arial 6pt

6. Country of Origin Statement (COO):
Example string" Made in Vietnam"
Font: Arial 6pt

7. Factory ID
This is "FY" which is provided by Sagemcom
Font: Arial 6pt

標籤製作粘貼方式/ F06C001.00/03/02 of 05

Select Dim. / Tol.	A	B	C	EPS	EPE	BAG	CTN *	Label	USR
0~6	0.05	0.05	0.10					0.20	
6~30	0.10	0.15	0.20	0.50	0.50	3.00		0.20	
30~120	0.15	0.20	0.30	0.50	0.50	5.00	2.00	0.25	
120~300	0.20	0.30	0.40	1.00	1.00	10.0	3.00	0.30	
300~450	0.25	0.40	0.50	2.00	2.00	15.0	5.00	0.50	
450~600	0.30	0.50	0.60	3.00	3.00	20.0	5.00	0.80	

DRAFT TOLERANCE ± 0.2° CRITICAL DIM. MARK *

MATERIAL (SPEC.)	SEE NOTES	SCALE 1/5	Foxconn Industrial Internet 富士康工业互联网
FINISH	SEE NOTES	SHEET 1/2	
UNIT MM	PART NAME SGC F06C001.00 device label		
SIZE A3	MODEL SGC F06C001.00	PART NO. 503.01834.005	DESIGNED David Kuo
	CUSTOMER MODEL SGC FAST 3896-15	CUSTOMER PART NO.	APPROVED Bailey Tan

REV.	MARK	ECR/ECN NO.	DATE	UPDATE DESCRIPTION	SIGNATURE
00			2022/07/26	First offical release	David Kuo
01					

For F@ST3896 SUM COGECO

Device label

ID LABEL：503.01834.005
(82*50mm)

Sagemcom logo Height: 6mm

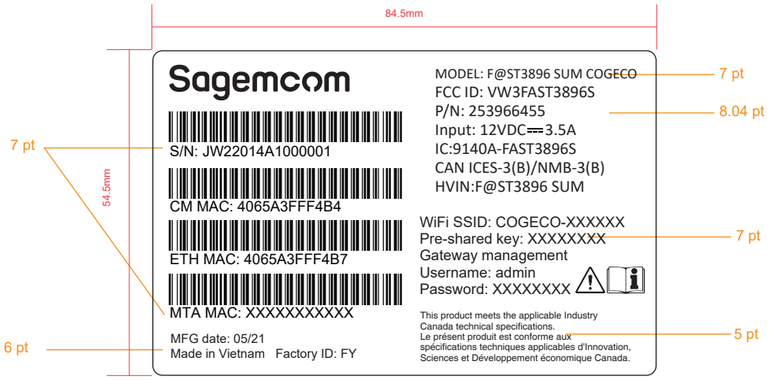

8. Model name: F@ST3896 SUM COGECO
   Depend on S/N JW22014A1000001
   A1 is the code raised for product SUM COGECO
   Font: Calibri 7pt

9. FCC ID: VW3FAST3896S
   Where VW3FAST3896S repesents the FCC ID that will be provided by Sagemcom
   Font: Calibri 8.04pt

10. P/N:
    Product code of F@ST3896 SUM COGECO is 253966455 (Fixed)
    Font: Calibri 8.04pt

11. Input / IC / CAN / HVIN
    Input is 12VDC ⎓ 3.5A
    IC:9140A-FAST3896S
    CAN ICES-3(B)/NMB-3(B)
    HVIN:F@ST3896 SUM
    These safty certification numbers are provided by Sagemcom.
    Font: Calibri 8.04pt

12. WiFi SSID/ Pre-shared Key:
    WiFi SSID: COGECO-XXXXXX
    Please see the table WiFi SSID column.
    Pre-shared Key: XXXXXXX
    (8 characters random key in lower letters(小寫8位))
    Font: Arial 7pt

13. Gateway management: Please see the table
    Username: admin
    (admin in lower letters)
    Password: XXXXXXX
    (8 characters random key in lower letters(小寫8位))
    Font: Arial 7pt

14. Safty Certification for Canada
    This product meets the applicable Industry Canada technical specifications.
    Le présent produit est conforme aux spécifications techniques applicables
    d'Innovation, Sciences et Développement économique Canada.
    Font: Arial 5pt

標籤製作粘貼方式/ F06C001.00/03/03 of 05

Select Dim. / Tol.	A	B	C	EPS	EPE	BAG	* CTN	Label	USR
0~6	0.05	0.05	0.10					0.20	
6~30	0.10	0.15	0.20	0.50	0.50	3.00		0.20	
30~120	0.15	0.20	0.30	0.50	0.50	5.00	2.00	0.25	
120~300	0.20	0.30	0.40	1.00	1.00	10.0	3.00	0.30	
300~450	0.25	0.40	0.50	2.00	2.00	15.0	5.00	0.50	
450~600	0.30	0.50	0.60	3.00	3.00	20.0	5.00	0.80	

DRAFT TOLERANCE ± 0.2° CRITICAL DIM. MARK *

MATERIAL (SPEC.)	SEE NOTES	SCALE 1/5	Foxconn Industrial Internet 富士康工业互联网
FINISH	SEE NOTES	SHEET 1/2	
UNIT MM	PART NAME SGC F06C001.00 device label		
SIZE A3	MODEL SGC F06C001.00	PART NO. 503.01834.005	DESIGNED David Kuo
	CUSTOMER MODEL SGC FAST 3896-15	CUSTOMER PART NO.	APPROVED Bailey Tan

REV.	MARK	ECR/ECN NO.	DATE	UPDATE DESCRIPTION	SIGNATURE
00			2022/05/17	First offical release	David Kuo
01					

For F@ST3896 SUM COGECO

Carton label

CARTON LABEL 503.01498.005

Sagemcom logo Height: 6.6mm

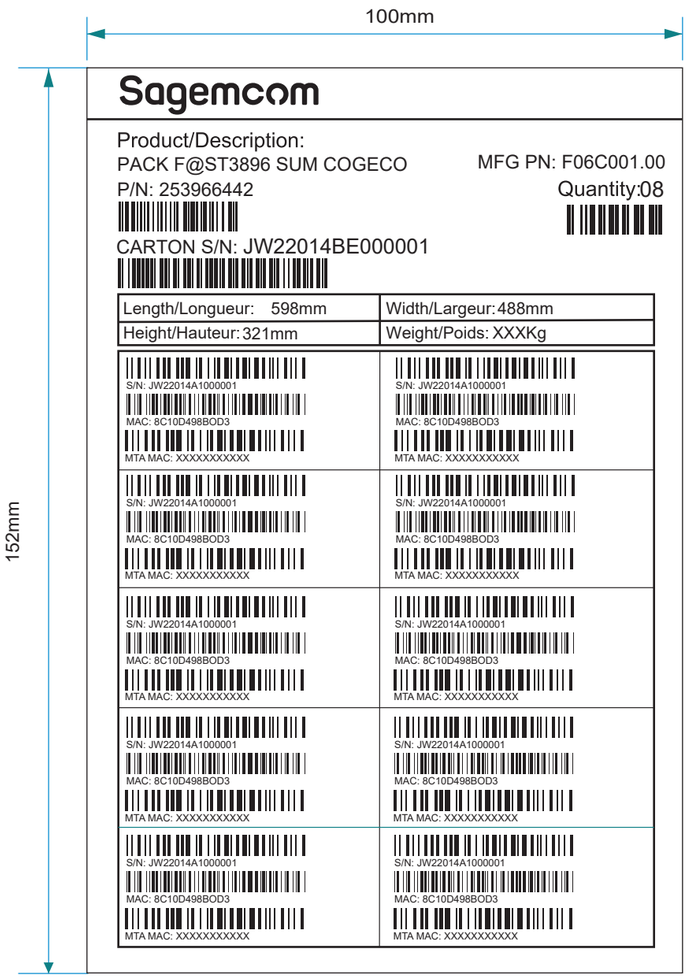

Product /Description Font: Arial Bold 9pt

PACK F@ST3896 SUM COGECO Font: Arial 9pt

MFG PN: F06C001.00 Font: Arial 9pt

P/N: 253966442

Pack PN of F@ST3896 SUM COGECO is 253966442
Barcode Code Symbology: Code 128
Bar Code Dimensions: Minimum width of 40mm,
Minimum heigh of 5mm
Font: Arial 9pt

CARTON S/N: JW22014BE000001

Barcode Code Symbology: Code 128
Bar Code Dimensions: Minimum width of 40mm,
Minimum heigh of 5mm
Font: Arial 9pt

JW22014BE000001

- JW: It's the production site code for Fii (Created by Sagemcom)
- 22: Year
- 014: Packing date (001 = 1st January; 365 or 366 = 31st December)
- BE: code for the outer box
- 000001: counter (6 digits from 000001 to 999999).

NB: these 6 last digits must be reset at each new packing date and must be different in case several product codes are packed during the same day.

Quantity: XX (It depends on actual quantity)

Each carton will put 10 devices at most
Barcode Code Symbology: Code 128
Bar Code Dimensions: Minimum width of 40mm,
Minimum heigh of 5mm
Font: Arial 9pt

It depends on actual carton size and weight

Lengeh/Longueuer: 598 mm Width/Largeur: 488 mm

Height/Hauteur: 321 mm Weight/Poids: XX.XX Kg

Font: Arial 8pt

S/N
Barcode Code Symbology: Code 128
Bar Code Dimensions: Minimum width of 40mm,
Minimum heigh of 3.5mm
Font: Arial 5pt

MAC
Barcode Code Symbology: Code 128
Bar Code Dimensions: Minimum width of 40mm,
Minimum heigh of 3.5mm
Font: Arial 5pt

MTA MAC
Barcode Code Symbology: Code 128
Bar Code Dimensions: Minimum width of 40mm,
Minimum heigh of 3.5mm
Font: Arial 5pt

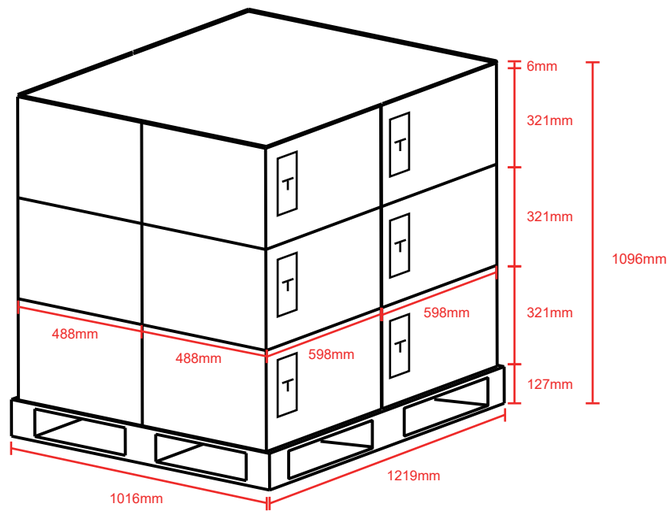

標籤製作粘貼方式/ F06C001.00/03/04 of 05

MATERIAL (SPEC.) SEE NOTES		SCALE 1/5	Foxconn Industrial Internet 富士康工业互联网
FINISH SEE NOTES		SHEET 1/2	
UNIT MM		PART NAME SGC F06C001.00 device label	
SIZE A3		MODEL SGC F06C001.00	PART NO. 503.01498.005 / DESIGNED David Kuo
		CUSTOMER MODEL SGC FAST 3896-15	CUSTOMER PART NO. / APPROVED Bailey Tan

Select Dim. / Tol.	A	B	C	EPS	EPE	BAG	* CTN	Label	USR
0~6	0.05	0.05	0.10					0.20	
6~30	0.10	0.15	0.20	0.50	0.50	3.00		0.20	
30~120	0.15	0.20	0.30	0.50	0.50	5.00	2.00	0.25	
120~300	0.20	0.30	0.40	1.00	1.00	10.0	3.00	0.30	
300~450	0.25	0.40	0.50	2.00	2.00	15.0	5.00	0.50	
450~600	0.30	0.50	0.60	3.00	3.00	20.0	5.00	0.80	

DRAFT TOLERANCE ± 0.2° CRITICAL DIM. * MARK

REV.	MARK	ECR/ECN NO.	DATE	UPDATE DESCRIPTION	SIGNATURE
00			2022/05/17	First offical release	David Kuo
01					

For F@ST3896 SUM COGECO

Pallet label

PALLET LABEL 503.01766.005

Sagemcom logo Height: 6.6mm

Product /Description Font: Arial Bold 10pt

PACK F@ST3896 SUM COGECO Font: Arial 10pt
MFG PN: F06C001.00 Font: Arial 10pt
P/N: 253966442

Pack PN of F@ST3896 SUM COGECO is 253966442
Barcode Code Symbology: Code 128
Bar Code Dimensions: Minimum width of 40mm,
Minimum heigh of 5mm
Font: Arial 10pt

CARTON S/N: JW22014BE000001

Barcode Code Symbology: Code 128
Bar Code Dimensions: Minimum width of 40mm,
Minimum heigh of 5mm
Font: Arial 10pt

The pallet serial number 15 digits

JW22014BS000001
- JW: It is the production site code for Fii
- 22: Year
- 014: Packing date
  (001 = 1st January; 365 or 366 = 31st December)
- BS: Code for pallet
- 000001: counter (6 digits from 000001 to 999999).

NB: these 6 last digits must be reset at each new packing date and must be different in case several product codes are packed during the same day.

Quantity: XXX Units

Each pallet will put 120 devices at most
Barcode Code Symbology: Code 128
Bar Code Dimensions: Minimum width of 40mm,
Minimum heigh of 5mm
Font: Arial 10pt

(XX Cartons)

Each pallet will put 12 cartons at most
Barcode Code Symbology: Code 128
Bar Code Dimensions: Minimum width of 40mm,
Minimum heigh of 5mm
Font: Arial 10pt

It depends on actual pallet size and weight

Lengeh/Longueuer: 1196 mm Width/Largeur: 976 mm

Height/Hauteur: XXX mm Weight/Poids: XX.XX Kg

Font: Arial 7pt

Each Pallet label will put 12 QR code at most

QR code 36x36mm

QR code content: list of all products S/N in the carton' format as below:

Each carton will put 10 devices at most
JW22014A1000001
JW22014A1000002
JW22014A1000003
JW22014A1000004
JW22014A1000005
JW22014A1000006
JW22014A1000007
JW22014A1000008
JW22014A1000009
JW22014A1000010

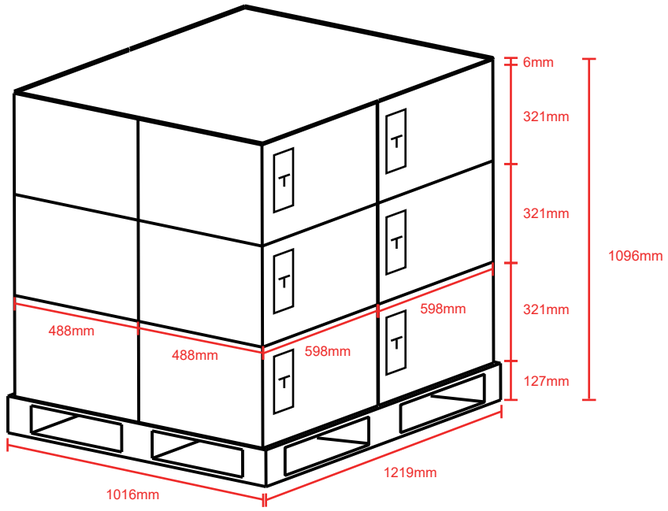

標籤製作粘貼方式/ F06C001.00/03/05 of 05

MATERIAL (SPEC.)	SEE NOTES	SCALE 1/5
FINISH	SEE NOTES	SHEET 1/2

Select Dim. \ Tol.	A	B	C	EPS	EPE	BAG	CTN *	Label	USR
0~6	0.05	0.05	0.10					0.20	
6~30	0.10	0.15	0.20	0.50	0.50	3.00		0.20	
30~120	0.15	0.20	0.30	0.50	0.50	5.00	2.00	0.25	
120~300	0.20	0.30	0.40	1.00	1.00	10.0	3.00	0.30	
300~450	0.25	0.40	0.50	2.00	2.00	15.0	5.00	0.50	
450~600	0.30	0.50	0.60	3.00	3.00	20.0	5.00	0.80	

DRAFT TOLERANCE ± 0.2° CRITICAL DIM. MARK *

UNIT MM

SIZE A3

Foxconn Industrial Internet 富士康工业互联网

PART NAME		
SGC F06C001.00 device label		
MODEL: SGC F06C001.00	PART NO.: 503.01766.005	DESIGNED: David Kuo
CUSTOMER MODEL: SGC FAST 3896-15	CUSTOMER PART NO.:	APPROVED: Bailey Tan