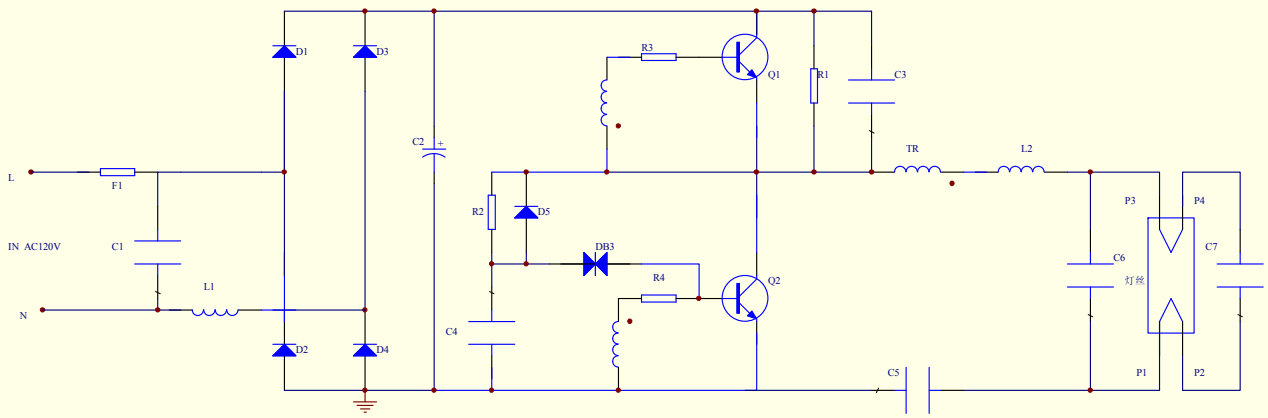

ESX-18W/20W;ESX-23W

Title	T3/20W/23W原理图		
Size B	Number	Revision	1.0
Date:	5-Mar-2009	Sheet of	
File:	D:\NVC-40.Ddb	Drawn By:	黄 赛