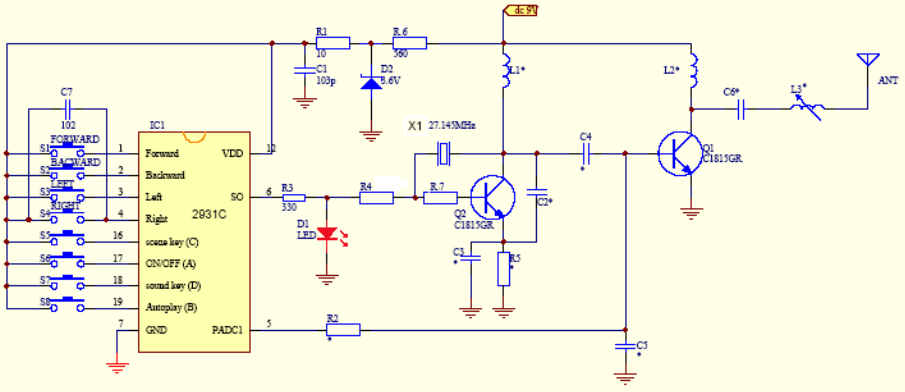

	L1	L2	L3	C2	R4	C4	C5	C6	R2	R5	C3	R.7
27.145MHZ	2.2UH	2.1UH	5.6UH	33PF	150K	101	471	56PF	22K	220	101	101

Title	815010/815020/815030/815040/815070/815080	
Size A4	Number	Revision
Date:	12-Mar-2008	Sheet of
File:	C:\Documents and Settings\wangkong\桌面\815015.DSN	