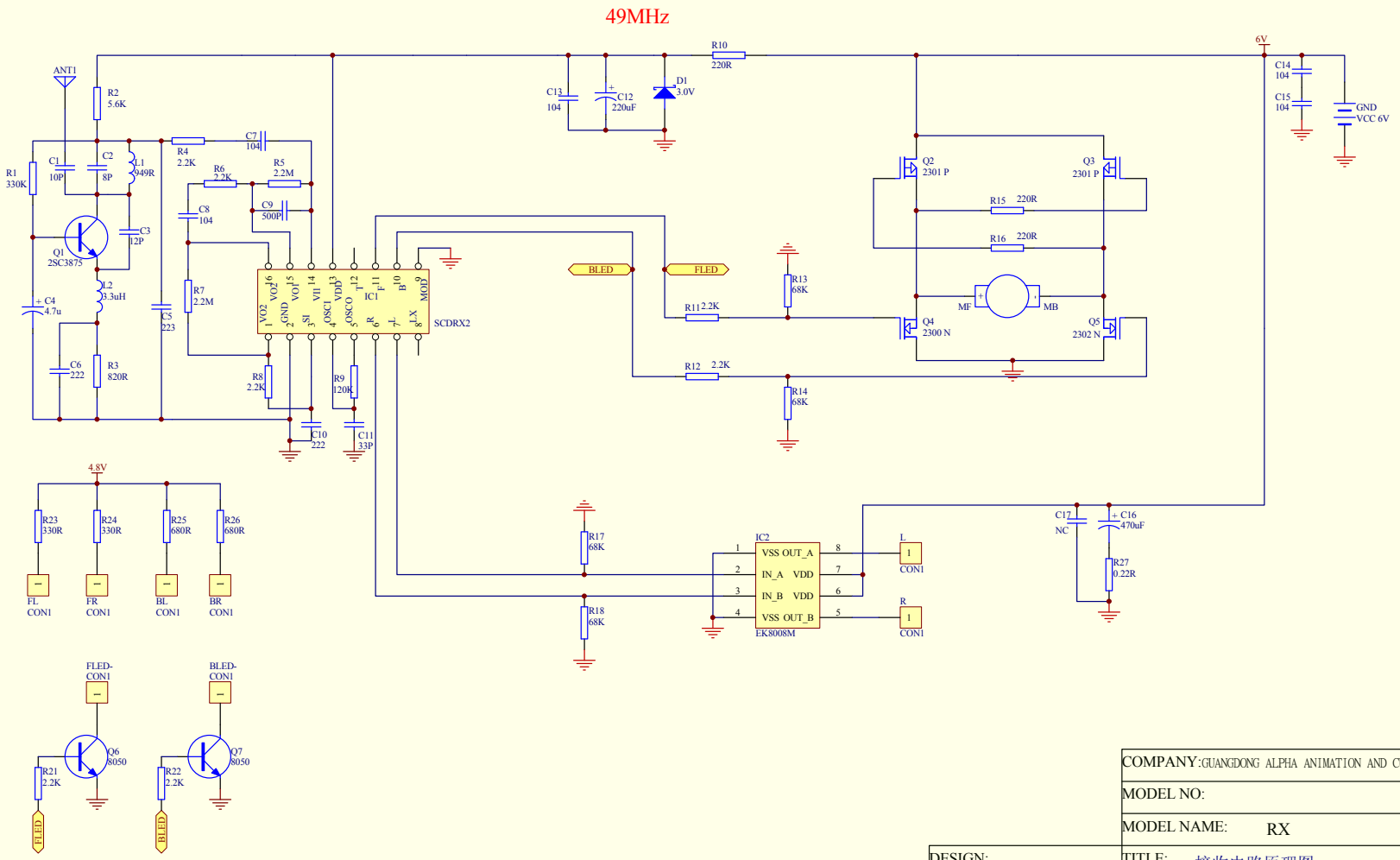

	COMPANY: GUANGDONG ALPHA ANIMATION AND CULTURE CO.,LTD.		
	MODEL NO:		
	MODEL NAME: RX		
DESIGN:	TITLE: 接收电路原理图		
CHECKED:	DRAWING NO:		REV: 01
APPROVED:	CODE:	SIZE:	SHEET: 1 OF 1