REVISION RECORD			
LTR	ECO NO:	APPROVED:	DATE:

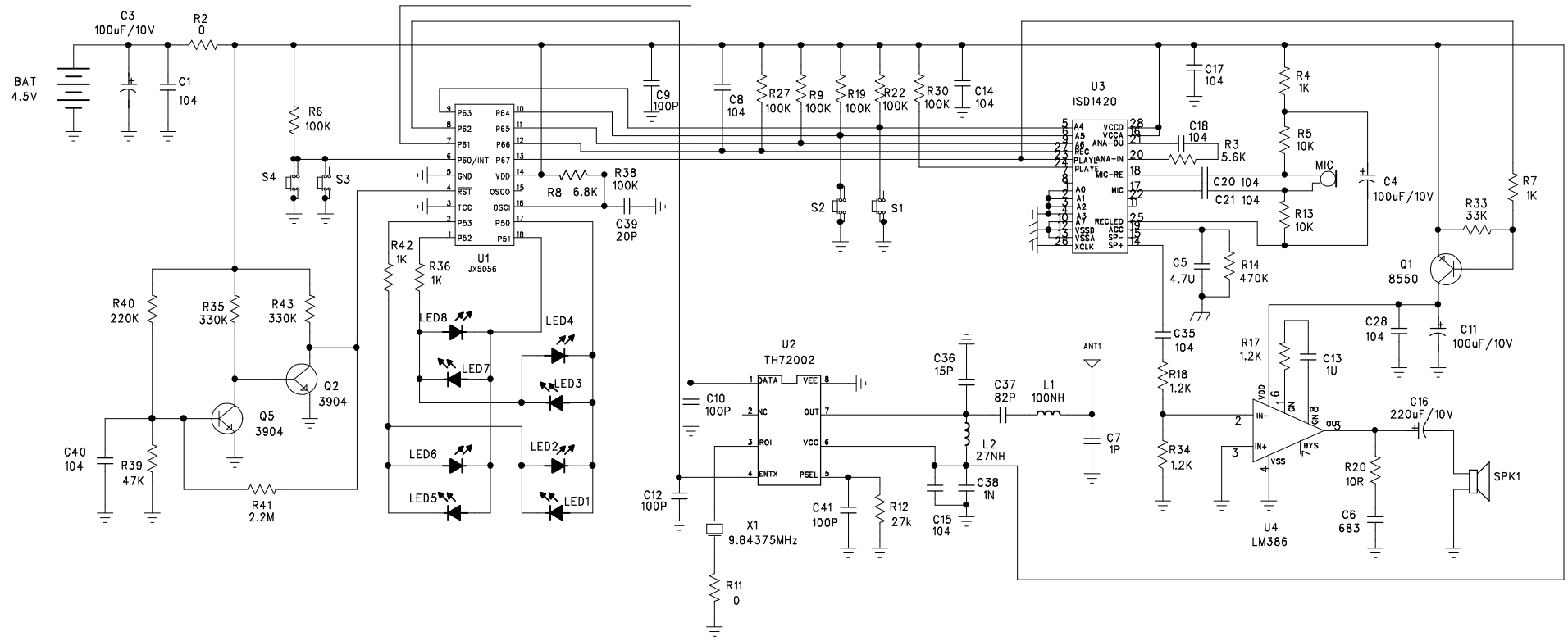

COMPANY:	KONGTOP	
TITLE:	315MHz transmitter	
CODE:	DRAWING NO:	REV: 1
DRAWN:	DATED: 2007/11/29	

PDF 文件使用 "pdfFactory Pro" 试用版本创建 www.fineprint.com.cn