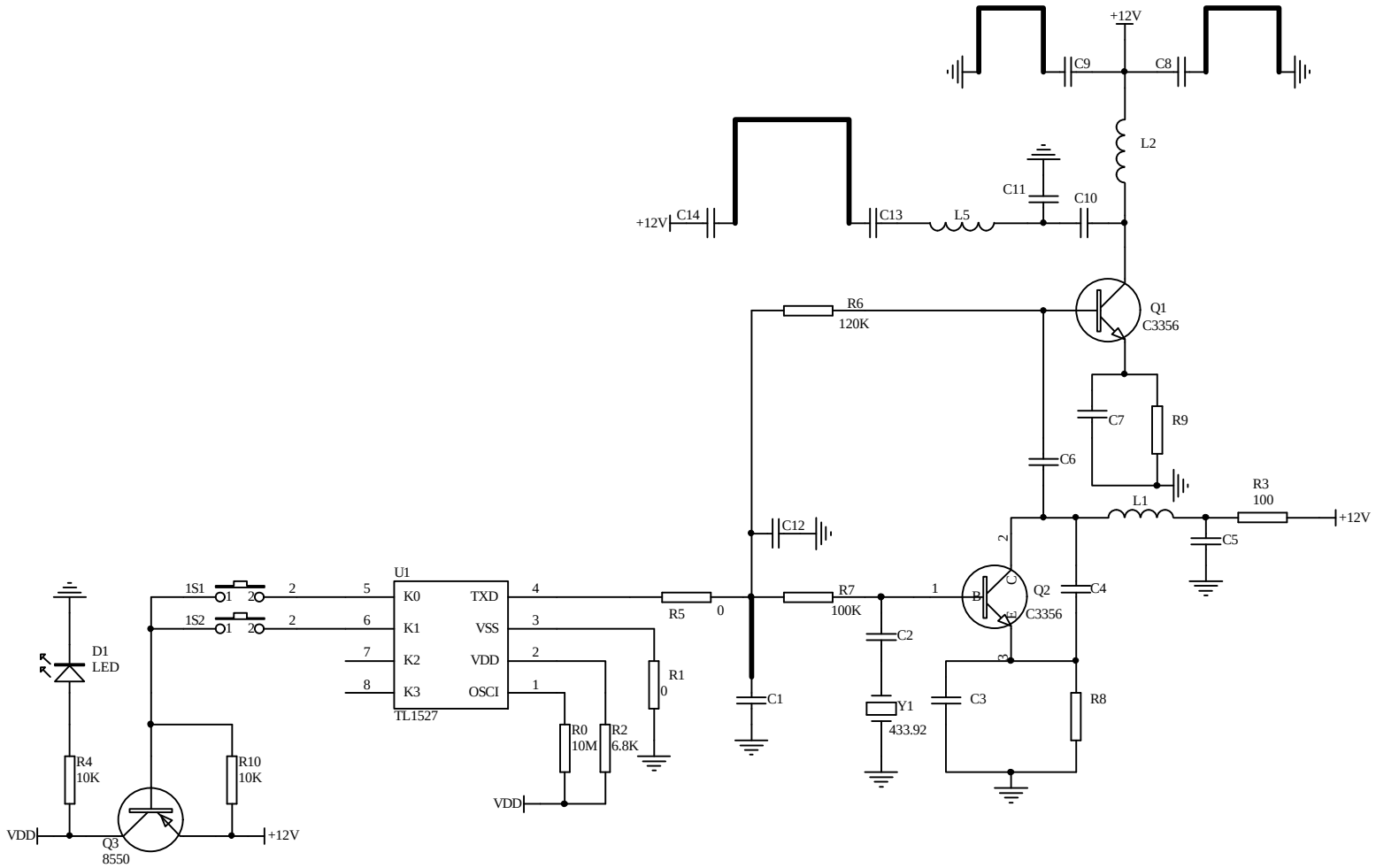

Title	遥控器原理图 (Remote Control Theory)	
Size A4	Number	Revision
Date: 31-Oct-2007		Sheet of
File:		Drawn By: