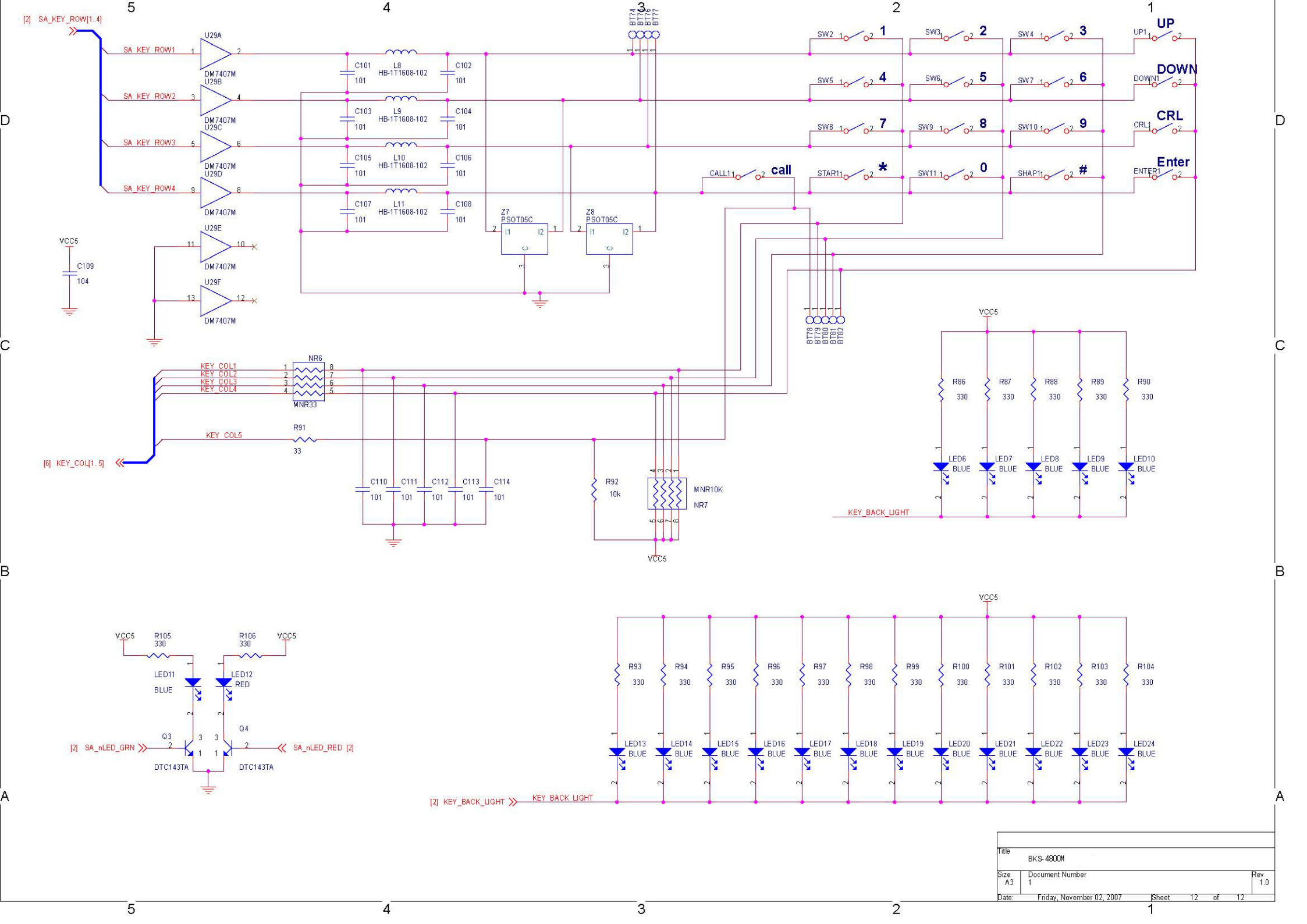
[2] SA_KEY_ROW[1..4]
SA_KEY_ROW1
SA_KEY_ROW2
SA_KEY_ROW3
SA_KEY_ROW4
U29A
U29B
U29C
U29D
U29E
U29F
DM7407M
VCC5
C109
104
C101
C102
C103
C104
C105
C106
C107
C108
101
L8
L9
L10
L11
HB-1T1608-102
Z7
Z8
PSOT05C
BT74
BT75
BT76
BT77
BT78
BT79
BT80
BT81
BT82
SW2
SW3
SW4
SW5
SW6
SW7
SW8
SW9
SW10
SW11
CALL1
STAR1
SHAP1
UP1
DOWN1
CRL1
ENTER1
UP
DOWN
CRL
Enter
call
KEY_COL1
KEY_COL2
KEY_COL3
KEY_COL4
KEY_COL5
[6] KEY_COL[1..5]
NR6
MNR33
R91
33
C110
C111
C112
C113
C114
R92
10k
MNR10K
NR7
R86
R87
R88
R89
R90
330
LED6
LED7
LED8
LED9
LED10
BLUE
KEY_BACK_LIGHT
R105
R106
LED11
LED12
RED
Q3
Q4
DTC143TA
[2] SA_nLED_GRN
SA_nLED_RED [2]
R93
R94
R95
R96
R97
R98
R99
R100
R101
R102
R103
R104
LED13
LED14
LED15
LED16
LED17
LED18
LED19
LED20
LED21
LED22
LED23
LED24
[2] KEY_BACK_LIGHT
Title
BKS-4800M
Size
A3
Document Number
1
Rev
1.0
Date:
Friday, November 02, 2007
Sheet
12
of
12

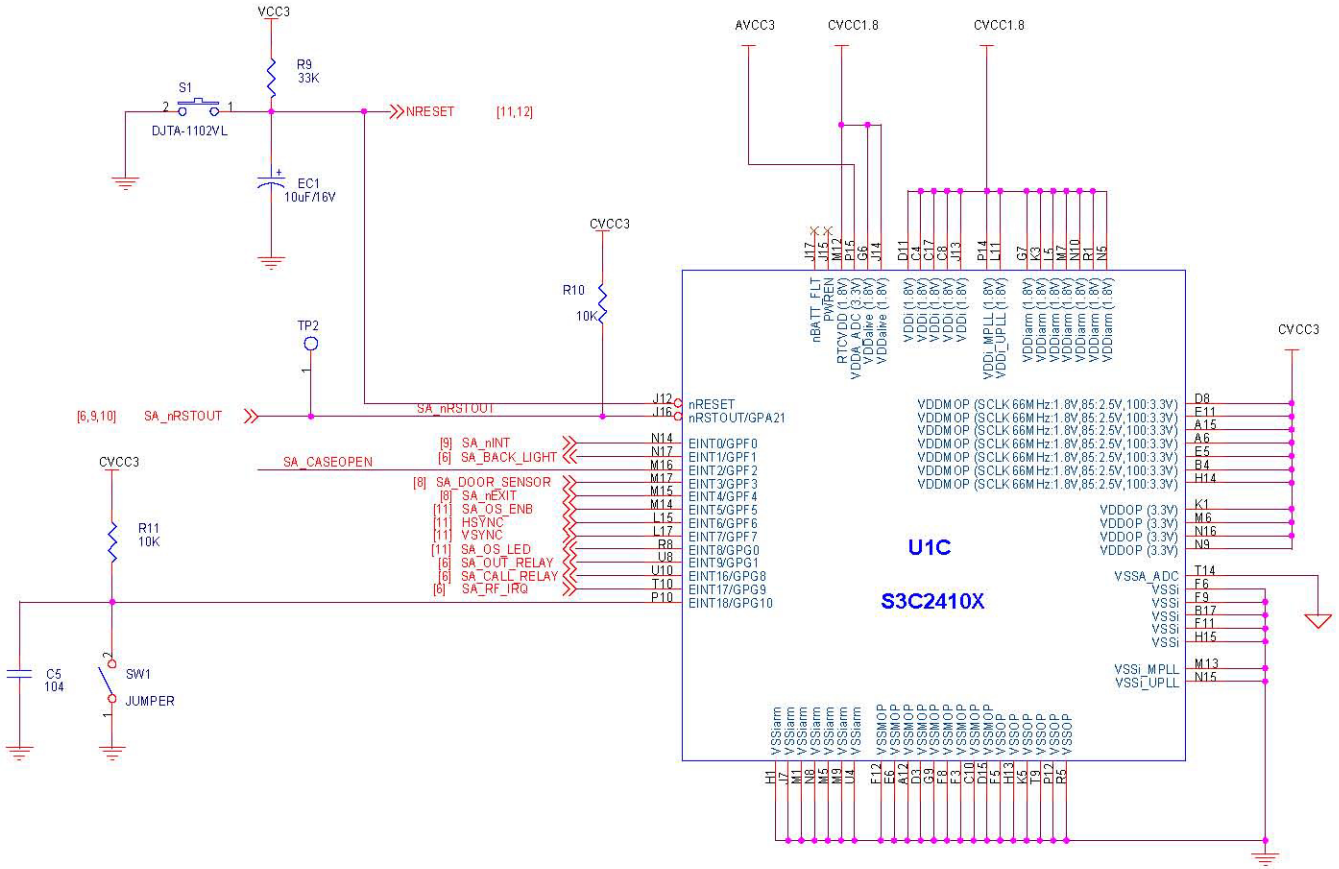

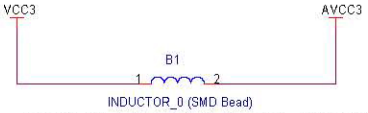

Power is isolation Analog (AVCC3) between Digital (VCC3)

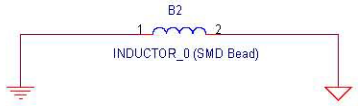

Ground layer is isolation Analog (AVSS) between Digital (DVSS)

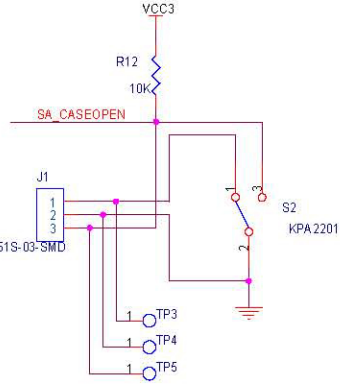

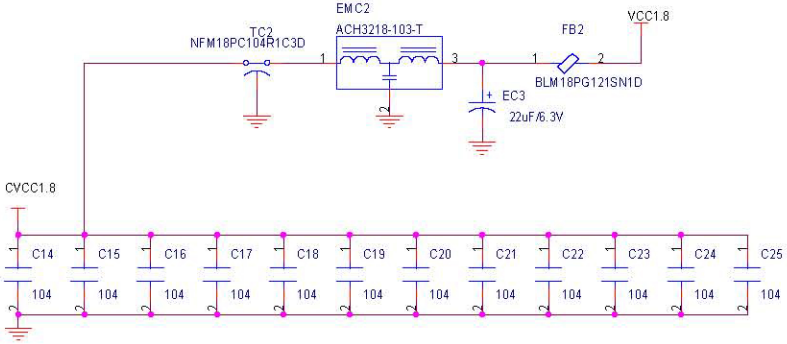

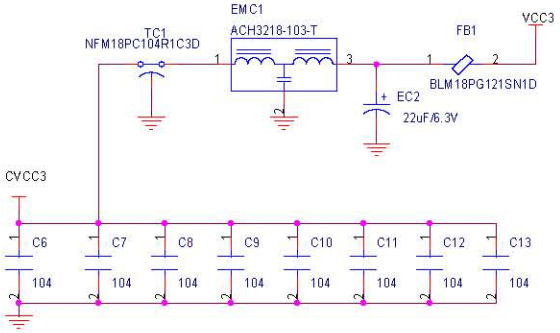

Title	BKS-4800M	
Size A3	Document Number 1	Rev 1.0
Date: Friday, November 02, 2007	Sheet 3 of 12	

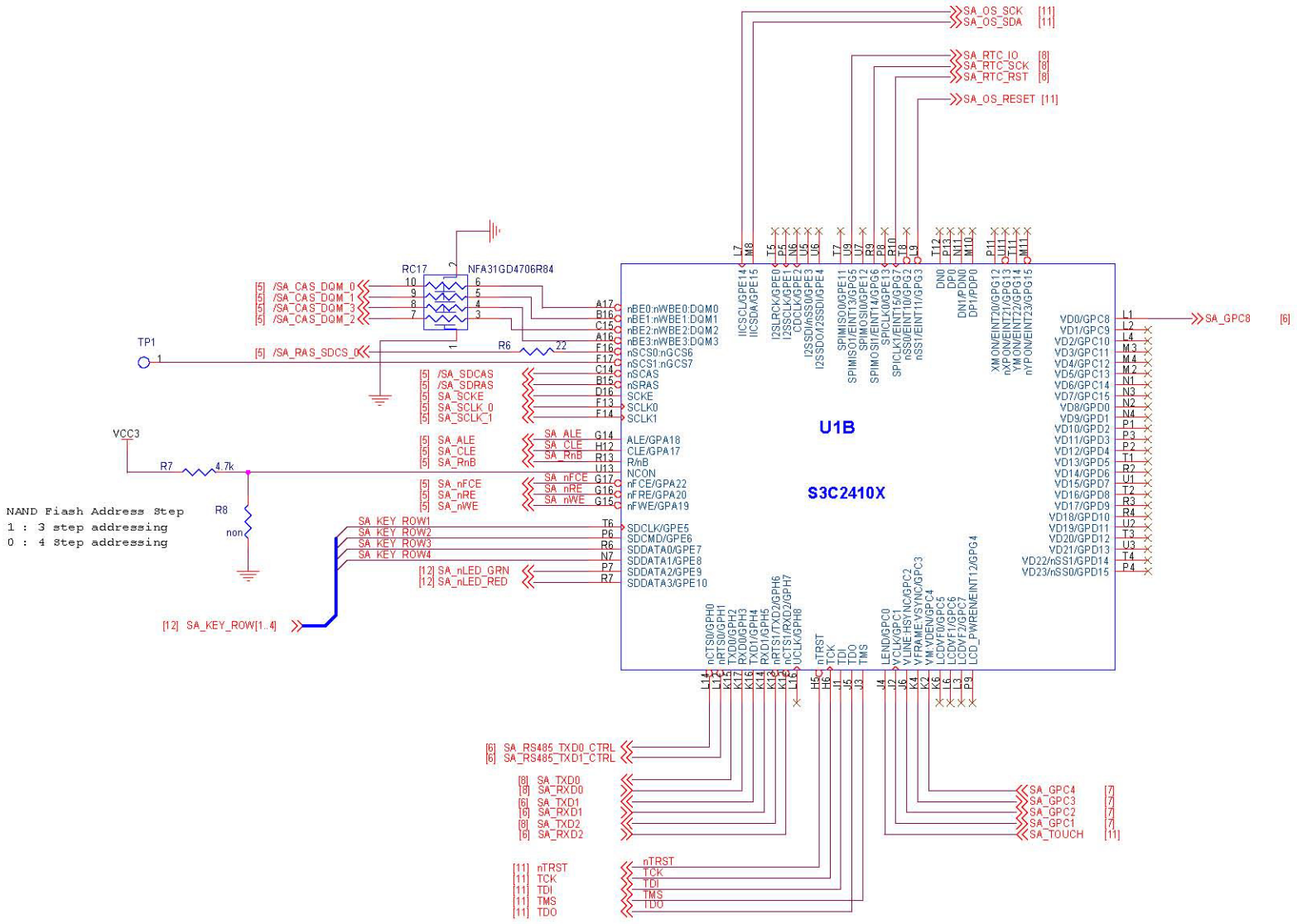

Title	BKS-4800M
Size A3	Document Number 1
Rev	1.0
Date:	Friday, November 02, 2007
Sheet	2 of 12