TOSHIBA
Leading Innovation

User's Manual

TOSHIBA AT10LE-A/AT10PE-A series

Table of Contents

Chapter 1 **Legal & Regulatory**

Copyright 1-1
Disclaimer 1-1
Trademarks 1-2
H.264/AVC, VC-1 and MPEG-4 License Notice 1-2
FCC information 1-3
CE compliance 1-4
Working environment 1-4
Additional environments not related to EMC 1-5
REACH - Compliance Statement 1-5
Following information is only valid for EU-member States: 1-6
Following information is only for India 1-7
Canadian regulatory information (Canada only) 1-7
Canada - Industry Canada (IC) 1-7
Following information is only for Turkey: 1-7

Chapter 2 **Introduction**

About the guide 2-1
Instruction Manual for Safety and Comfort 2-1
Safety icons 2-1

Chapter 3 **Getting Started**

Check the components 3-1
Grand tour 3-1
Hardware 3-5
Using the tablet for the first time 3-6
Care and use of the battery 3-10
Charging the battery 3-11

Chapter 4 **Basics**

Using the touch screen 4-1
Using the Stylus Pen 4-1
Getting to know the Home screen 4-4
Opening and switching applications 4-6
Monitoring your tablet’s status 4-6
Quick Settings 4-7
Managing Notifications 4-8
Locking your screen 4-9

Capturing your screen 4-9
Customizing the Home screen 4-9
Changing the Screen Orientation 4-11
Managing Tasks and Applications 4-11
Connecting to a computer 4-11
Factory Reset 4-12

Chapter 5 **Applications**

Analog clock 5-1
Browser 5-1
Calculator 5-3
Calendar 5-4
Camera 5-4
Clock 5-6
Downloads 5-7
Email 5-7
Gallery 5-9
The Google Play™ Music App 5-10
People 5-10
Service Station 5-11
TOSHIBA Media Player 5-13
TOSHIBA File Manager 5-14
TOSHIBA TruNote 5-17
TOSHIBA TruCapture 5-17
Online Manual 5-18

Chapter 6 **Settings**

Wireless & networks 6-1
Device 6-8
Personal 6-16
Accounts 6-20
System 6-21

Chapter 7 **Optional Accessories**

Memory media slot 7-1
SIM card slot 7-3
USB device 7-4
HDMI device 7-5
TOSHIBA Keyboard Cover 7-6
Optional TOSHIBA Accessories 7-11

Chapter 8 **Troubleshooting**

Problem solving process 8-1
Hardware and system checklist 8-2
TOSHIBA Support 8-4

Chapter 9 **Specifications**

Physical Dimensions 9-1
Environmental Requirements 9-1

Chapter 10 **Information for Wireless Devices**

Wireless Technology Interoperability 10-1
CAUTION about Wireless Devices 10-1
Wireless Devices and your health 10-2
Radio Regulatory Information 10-2
Device Authorization 10-7
Radio approvals for wireless devices 10-7

Declaration of Conformity

1. **Health (Article 3.1(a) of the R&TTE Directive)**
   - EN62311:2008/ EN62209-2:2010 /EN62479:2010/ EN50364:2010
2. **Safety (Article 3.1(a) of the R&TTE Directive)**
   - EN 60950-1:2006/A11:2009+A1:2010+A12:2011
3. **Electromagnetic compatibility (Article 3.1 (b) of the R&TTE Directive)**
   - EN 301 489-1 V1.9.2/-3 V1.4.1/-7 V1.3.1/-17 V2.2.1/-24 V1.5.1
   - EN 55022:2010/ AC:2011 Class B ; EN55024: 2010
   - EN 61000-3-2:2006/A1:2009/A2:2009; EN 61000-3-3:2008
4. **Radio frequency spectrum usage (Article 3.2 of the R&TTE Directive)**
   - EN 301 511 V9.0.2
   - EN 301 908-1 V5.2.1/ -2 V5.2.1
   - EN 300 328 V1.7.1
   - EN 301 893 V1.7.1
   - EN 300 440-1V1.6.1/ -2 V1.4.1
   - EN 302 291-1-2 V1.1.1
5. **RoHS Directive 2011/65/EU**
   - EN 50581: 2012

Chapter 1

Legal & Regulatory

Copyright

© 2013 by TOSHIBA Corporation. All rights reserved. Under the copyright laws, this manual cannot be reproduced in any form without the prior written permission of TOSHIBA. No patent liability is assumed, with respect to the use of the information contained herein.

First edition April 2013

Disclaimer

This manual has been validated and reviewed for accuracy. The instructions and descriptions it contains are accurate for this device at the time of this manual's production. However, succeeding devices and manuals are subject to change without notice. TOSHIBA assumes no liability for damages incurred directly or indirectly from errors, omissions or discrepancies between this device and the manual.

This product incorporates copy protection technology that is protected by U.S. and foreign patents, including patent numbers 5,315,448; 5,583,936; 6,836,549; and 7,050,698 and other intellectual property rights. The use of Rovi Corporation's copy protection technology in the product must be authorized by Rovi Corporation. Reverse engineering or disassembly is prohibited.

TO THE MAXIMUM EXTENT PERMITTED BY APPLICABLE LAW, TOSHIBA CORPORATION, ITS AFFILIATES AND/OR SUPPLIERS ("TOSHIBA") DISCLAIM ALL WARRANTIES WITH REGARD TO THE SOFTWARE, EITHER EXPRESSLY -IMPLIED, OR STATUTORY, INCLUDING, BUT NOT LIMITED TO, THE WARRANTY OF NONINFRINGEMENT OF THIRD PARTY RIGHTS, AND THE IMPLIED WARRANTIES AND CONDITIONS OF MERCHANTABILITY AND FITNESS FOR A PARTICULAR PURPOSE. THE ENTIRE RISK AS TO THE QUALITY AND PERFORMANCE OF THE SOFTWARE IS WITH YOU. TOSHIBA SHALL NOT WARRANT THAT THE FUNCTIONS CONTAINED IN THE SOFTWARE WILL MEET YOUR REQUIREMENTS OR THAT THE OPERATION OF THE SOFTWARE WILL BE UNINTERRUPTED OR ERROR-FREE.

Notwithstanding the above, portions of the software include software files subject to certain open source license agreements, and such open source software files are subject to the notices and additional terms and conditions that are referenced in the End User License Agreement ("EULA") shown in "Toshiba Legal Information" section of the "Legal information" available

under the “About tablet” in the “Settings” app. (EULA document is also in this package.) Such open source software files are provided on an “AS IS” basis to the maximum extent permitted by applicable law.

Please carefully read “Open source licenses” section of the “Legal Information” available under the “About tablet” in the “Settings” app for the relevant copyright and licensing terms. If there is any discrepancy between the terms and conditions of the applicable open source license agreement and the EULA, the terms and conditions of the applicable open source license agreement prevail with respect to the applicable open source software.

Until the date that is three years after you acquired the Software, you may obtain a copy of the source code corresponding to the binaries for GPL-licensed file by sending a request to TOSHIBA customer service at [http://support.toshiba-tie.co.jp/android/index_e.htm], and TOSHIBA will send you a link to such source code.

Trademarks

Android, Google, Google Play, Chrome, Google Talk, Google Maps and other marks are trademarks of Google Inc.

Availability of Google applications, services, and features may vary by country, carrier, phone model, and manufacturer.

Bluetooth is a trademark owned by its proprietor and used by TOSHIBA under license.

Wi-Fi is a registered trademark of the Wi-Fi Alliance.

Secure Digital and SD are trademarks of SD Card Association.

Adobe, Adobe PDF and Reader are either registered trademarks or trademarks of Adobe Systems Incorporated in the United States and/or other countries.

DTS, the Symbol, & DTS and the Symbol together are registered trademarks and DTS Premium Voice Pro is a trademark of DTS, Inc. © DTS, Inc. All Rights Reserved.

Other trademarks and registered trademarks not listed above may be used in this manual.

H.264/AVC, VC-1 and MPEG-4 License Notice

THIS PRODUCT IS LICENSED UNDER THE AVC, THE VC-1 AND MPEG-4 VISUAL PATENT PORTFOLIO LICENSE FOR THE PERSONAL AND NON-COMMERCIAL USE OF A CONSUMER TO (i)ENCODING VIDEO IN COMPLIANCE WITH THE AVC STANDARD ("VIDEO") AND/OR (ii)DECODING AVC, VC-1 AND MPEG-4 VIDEO THAT WAS ENCODED BY A CONSUMER ENGAGED IN A PERSONAL AND NON-COMMERCIAL ACTIVITY AND/OR WAS OBTAINED FROM A VIDEO PROVIDER LICENSED BY MPEG LA TO PROVIDE SUCH VIDEO. NO LICENSE IS GRANTED OR SHALL BE IMPLIED FOR ANY OTHER USE.

ADDITIONAL INFORMATION INCLUDING THAT RELATING TO PROMOTIONAL, INTERNAL AND COMMERCIAL USES AND LICENSING MAY BE OBTAINED FROM MPEG LA,L.L.C. SEE http://www.mpegla.com

FCC information

FCC notice "Declaration of Conformity Information"

This equipment has been tested and found to comply with the limits for a Class B digital device, pursuant to part 15 of the FCC rules. These limits are designed to provide reasonable protection against harmful interference in a residential installation. This equipment generates, uses and can radiate radio frequency energy and, if not installed and used in accordance with the instructions, may cause harmful interference to radio communications.

However, there is no guarantee that interference will not occur in a particular installation. If this equipment does cause harmful interference to radio or television reception, which can be determined by turning the equipment off and on, the user is encouraged to try to correct the interference by one or more of the following measures:

- Reorient or relocate the receiving antenna.
- Increase the separation between the equipment and receiver.
- Connect the equipment into an outlet on a circuit different from that to which the receiver is connected.
- Consult the dealer or an experienced radio/TV technician for help.

Only peripherals complying with the FCC class B limits may be attached to this equipment. Operation with non-compliant peripherals or peripherals not recommended by TOSHIBA is likely to result in interference to radio and TV reception. Shielded cables must be used between the external devices and the device's Universal Serial Bus (USB 2.0) ports and microphone/headphone combo jack. Changes or modifications made to this equipment, not expressly approved by TOSHIBA or parties authorized by TOSHIBA could void the user's authority to operate the equipment.

FCC conditions

This device complies with part 15 of the FCC Rules. Operation is subject to the following two conditions:

1. This device may not cause harmful interference.
2. This device must accept any interference received, including interference that may cause undesired operation.

Contact

Address:	TOSHIBA America Information Systems, Inc. 9740 Irvine Boulevard Irvine, California 92618-1697
Telephone:	(949) 583-3000

Caution: Exposure to Radio Frequency Radiation.

The radiated output power of the Wireless LAN is far below the FCC radio frequency exposure limits. Nevertheless, the Wireless LAN shall be used in such a manner that the potential for human contact during normal operation is minimized.

In the usual operating configuration, the distance between the antenna and the user should not be less than 20cm. Please refer to the "Grand Tour" section in this manual for the details regarding antenna location.

The installer of this radio equipment must ensure that the antenna is located or pointed such that it does not emit RF field in excess of Health Canada limits for the general population; consult Safety Code 6, obtainable from Health Canada’s website.

CE compliance

This product is carrying the CE-Mark in compliance with the related European Directives. Responsible for CE- Marking is TOSHIBA EUROPE GMBH, Hammfelddamm 8, 41460 Neuss, Germany. The complete and official EU Declaration of Conformity can be found on TOSHIBA's web site http://epps.toshiba-teg.com on the Internet.

Working environment

The Electromagnetic Compliance (EMC) of this product has been verified typically for this product category for a so called Residential, Commercial & Light Industry Environment. Any other working environment has not been verified by Toshiba and the use of this product in these working environments is maybe restricted or cannot be recommended. Possible consequences of the use of this product in non verified working environments can be: Disturbances of other products or of this product in the nearby surrounding area with temporarily malfunction or data loss/ corruption as result. Example of non verified working environments and related advices:

Industrial environment (e.g. where 3-phase 380V mains is being used mainly): Danger of disturbances of this product due to possible strong electromagnetic fields especially near to big machinery or power units.

Medical environment: The compliance to the Medical Product Directive has not been verified by Toshiba, therefore this product cannot be used as a medical product without further verification. The use in usual office environments e.g. in hospitals should be no problem if there is no restriction by the responsible administration.

Automotive environment: Please search the owner instructions of the related vehicle for advices regarding the use of this product (category).

Aviation environment: Please follow the instructions of the flight personnel regarding restrictions of use.

Additional environments not related to EMC

Outdoor use: As a typical home/office equipment this product has no special resistance against ingress of moisture and is not strong shock proofed.

Explosive atmosphere: The use of this product in such special working environment (Ex) is not allowed.

REACH - Compliance Statement

The new European Union (EU) chemical regulation, REACH (Registration, Evaluation, Authorization and Restriction of Chemicals), entered into force on 1 June 2007. Toshiba will meet all REACH requirements and is committed to provide our customers with information about the chemical substances in our products according to REACH regulation.

Please consult the following website www.toshiba-europe.com/computers/info/reach for information about the presence in our articles of substances included on the candidate list according to article 59(1) of Regulation (EC) No 1907/2006 („REACH“) in a concentration above 0.1% weight by weight.

This equipment may be operated in:							
AT	BE	BG	CH	CY	CZ	DE	DK
EE	ES	FI	FR	GB	GR	HU	IE
IT	IS	LI	LT	LU	LV	MT	NL
NO	PL	PT	RO	SE	SI	SK	TR

This device is restricted to indoor use only when operating in the 5150 to 5350 MHz frequency range.DFS controls related to radar detection shall not be accessible to the user.

This device have been tested to comply with the Sound Pressure Level requirement laid down in the applicable EN 50332-1and/or EN 50332-2 standards. Permanent hearing loss may occur if

earphones or headphones are used at high volume for prolonged periods of time.

Prevention of Hearing Loss

Warning statement requirement under EN 60950-1:A12.

To prevent possible hearing damage, do not listen at high volume

Note: For France, headphones/earphones for this device are compliant with

the sound pressure level requirment laid down in the applicable EN 50332-1: 2000 and/or EN50332-2: 2003 standard as required by Franch Article L.5232-1.

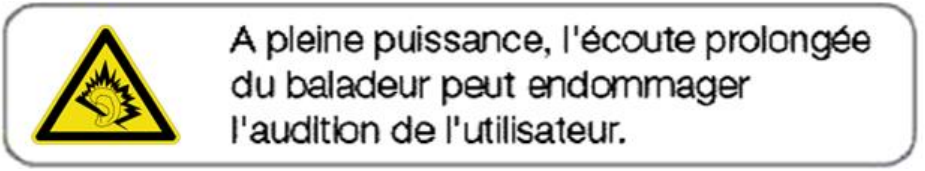

CE SAR Compliance

This device meets the EU requirements (1999/519/EC) on the limitation of exposure of the general public to electromagnetic fields by way of health protection.

The limits are part of extensive recommendations for the protection of the general public. These recommendations have been developed and checked by independent scientific organizations through regular and thorough evaluations of scientific studies. The unit of measurement for the European Council's recommended limit for mobile devices is the "Specific Absorption Rate" (SAR), and the SAR limit is 1.64 W/ kg averaged over 10 gram of tissue. It meets the requirements of the International Commission on Non-Ionizing Radiation Protection (ICNIRP).

Following information is only valid for EU-member States:

Disposal of products

The crossed out wheeled dust bin symbol indicates that products must be collected and disposed of separately from household waste. Integrated batteries and accumulators can be disposed of with the product. They will be separated at the recycling centres.

The black bar indicates that the product was placed on the market after August 13, 2005.

By participating in separate collection of products and batteries, you will help to assure the proper disposal of products and batteries and thus help to prevent potential negative consequences for the environment and human health.

For more detailed information about the collection and recycling programmes available in your country, please visit our website (http://eu.computers.toshiba-europe.com) or contact your local city office or the shop where you purchased the product.

Disposal of batteries and/or accumulators

The crossed out wheeled dust bin symbol indicates that batteries and/or accumulators must be collected and disposed of separately from household waste.

If the battery or accumulator contains more than the specified values of lead (Pb), mercury (Hg), and/or cadmium (Cd) defined in the Battery Directive (2006/66/EC), then the chemical symbols for lead (Pb), mercury (Hg) and/or cadmium (Cd) will appear below the crossed out wheeled dust bin symbol.

By participating in separate collection of batteries, you will help to assure the proper disposal of products and batteries and thus help to prevent potential negative consequences for the environment and human health.

For more detailed information about the collection and recycling programmes available in your country, please visit our website (http://eu.computers.toshiba-europe.com) or contact your local city office or the shop where you purchased the product.

These symbols may not stick depending on the country and region where you purchased.

Following information is only for India

The use of this symbol indicates that this product may not be treated as household waste.

By ensuring this product is disposed of correctly, you will help prevent potential negative consequences for the environment and human health, which could otherwise be caused by inappropriate waste handling of this product.

For more detailed information about recycling of this product, please visit our website (http://www.toshiba-india.com) or contact call center (1800-200-8674).

Canadian regulatory information (Canada only)

This digital apparatus does not exceed the Class B limits for radio noise emissions from digital apparatus as set out in the Radio Interference Regulation of the Canadian Department of Communications.

Note that Canadian Department of Communications (DOC) regulations provide, that changes or modifications not expressly approved by TOSHIBA Corporation could void your authority to operate this equipment.

This Class B digital apparatus meets all requirements of the Canadian Interference-Causing Equipment Regulations.

Cet appareil numérique de la class B respecte toutes les exgences du Règlement sur le matériel brouileur du Canada.

Canada - Industry Canada (IC)

This device complies with RSS 210 of Industry Canada.

Operation is subject to the following two conditions: (1) this device may not cause interference, and (2) this device must accept any interference, including interference that may cause undesired operation of this device.

The term "IC" before the equipment certification number only signifies that the Industry Canada technical specifications were met.

Following information is only for Turkey:

- Compliant with EEE Regulations: Toshiba meets all requirements of Turkish regulation 26891 “Restriction of the use of certain hazardous substances in electrical and electronic equipment”.

- The number of possible pixel failures of your display is defined according to ISO 9241-307 standards. If the number of pixel failures is less than this standard, they will not be counted as defect or failure.
- Battery is a consumption product, since the battery time depends on the usage of your tablet. If the battery can not be charged at all, then it is a defect or failure. The changes in battery time is not a defect or failure.

Chapter 2

Introduction

Welcome and thank you for choosing a TOSHIBA product.

About the guide

For your convenience, your TOSHIBA product is furnished with two guides:

- a Quick Start Guide, and
- this comprehensive PDF User's Manual

We recommend making a backup of this User's Manual in case of future reference.

Please backup your personal data saved in the internal storage before updating the platform.

Instruction Manual for Safety and Comfort

All important information on the safe and proper use of this tablet is described in the enclosed Instruction Manual for Safety and Comfort. Be sure to read it before using the tablet.

Safety icons

Safety icons are used in this manual to bring important information to your attention. Each type of icon and its implication are identified as shown below.

Indicates a potentially hazardous situation, which could result in death or serious injury, if you do not follow instructions.

Pay attention! A caution informs you that improper use of equipment or failure to follow instructions may cause data loss or damage your equipment.

Please read. A note is a hint or advice that helps you make best use of your equipment.

Chapter 3

Getting Started

This chapter provides a general overview of your tablet and some basics before using your tablet.

Some of the features described in this manual may not function properly if you use an operating system that was not pre-installed by TOSHIBA.

Check the components

Check to make sure you have all of the following items:

Hardware

- TOSHIBA Tablet
- AC adaptor (2-pin or 3-pin)
- Power cable
- Stylus Pen (provided with some models)
- Toshiba Keyboard Cover (provided with some models)

Stylus Pen is included together with spare pen tips and a tip removal tool in the small case coming with the product.

Documentation

- Quick Start Guide
- Instruction Manual for Safety and Comfort

If any of the items is missing or damaged, contact your dealer immediately.

Grand tour

Please handle your product carefully to avoid scratching or damaging the surface.

The following figure shows each important part of your tablet.

Figure 3-1 Grand tour of the tablet

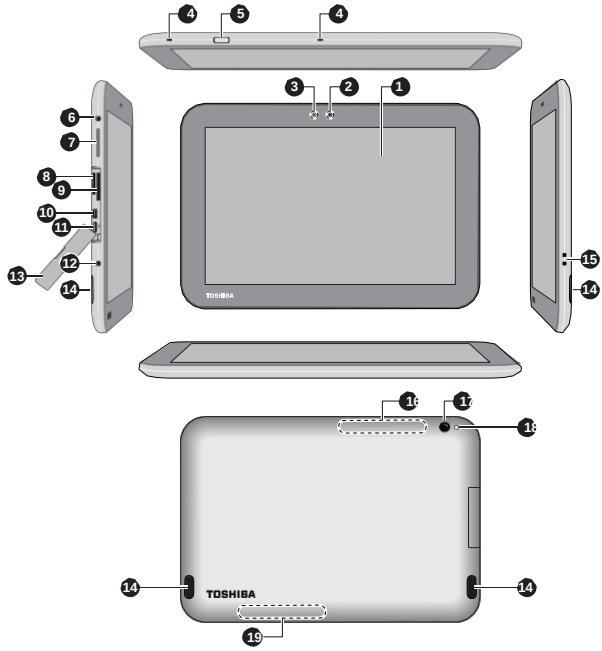

1. Display screen
2. Web Camera (front)
3. Ambient light sensor (not shown)
4. Microphones
5. Power button
6. Headphone/Microphone combo jack
7. Volume down/up button
8. Memory media slot
9. SIM card slot*
10. Micro HDMI port
11. Micro USB port
12. DC IN 12V jack
13. Interface Protection cover
14. Speakers
15. Strap hole for pen
16. Wireless communication antennas (not shown)
17. Camera (back)
18. Camera flash
19. NFC antenna (not shown)*

* Provided with some models.
Product appearance depends on the model you purchased.

Display screen	Display screen brightness can be adjusted manually and automatically controlled by panel power saving technology.

Under certain operating conditions, e.g., very high ambient temperatures, your tablet might automatically dim the LCD brightness in order to maintain a reasonable system temperature. The brightness would be dim obviously following display content changes with a lot of bright color, for example, white, yellow, etc. This is a normal protective feature and you might not be

able to manually adjust the LCD brightness during the auto dimming period.

Camera	Your tablet is equipped with a front Web Camera and a back camera used for recording video or taking photographs.

Both cameras may have different resolutions.

Ambient light sensor	Ambient light sensor can detect the light quality and intensity outside and can use this information to automatically adjust the display screen brightness.
Microphones	Built-in microphones allow you to record sounds. Some applications may support stereo recording.
Power button	Press & hold this button to turn on/off the tablet.
Headphone/ Microphone combo jack	A 3.5 mm mini headphone/microphone combo jack enables connection of a monaural microphone or stereo headphone.

The external microphone will be disabled if you use a 4-pin headset other than the type as shown below.

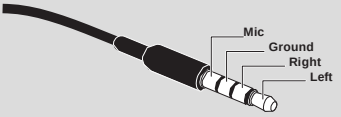

Volume down/up button	Press either of the buttons to decrease or increase the volume.
Micro HDMI port	Micro HDMI port can connect to HDMI cable with Type D connector. An HDMI cable sends video and audio signals. Please refer to the *HDMI device* section in "Optional Accessories" chapter for details.
SIM card slot	This slot lets you insert a single SIM card which enables a high-speed access to the Internet, corporate Intranet and your email while you are away from office.

	Memory media slot	This slot lets you insert a micro SD™ Card which enables you to transfer data from devices, such as digital camera, onto your tablet. Please refer to the *Memory media slot* section in "Optional Accessories" chapter for details.

Keep foreign metal objects, such as screws, staples and paper clips, out of the memory media slot. Foreign metal objects can create a short circuit, which can cause damage and fire, possibly resulting in serious injury.

	Micro USB port	The tablet acts both as a host and a client via this port. It allows you to connect the tablet to a computer for transferring data. When acting as a host, the tablet can fast and directly communicate with other client devices without the assistance of a computer. Please refer to the *USB device* section in "Optional Accessories" chapter for details.
	Interface protection cover	The interface protection cover provides protections to your port and slot.
DC IN 12V	**DC IN 12V jack**	The AC adaptor connects to this jack in order to power the tablet and charge its internal batteries. Please note that you should only use the model of AC adaptor supplied with the tablet at the time of purchase - using the wrong AC adaptor can cause damage to the tablet.
	Speakers	The speakers emit sound generated by your software as well as audio alarms, such as low battery condition, generated by the system.
	Strap hole for pen	This hole is used for hanging your Stylus Pen with a rope.
	Wireless communication antennas	The tablet is equipped with a Wireless LAN, Bluetooth and 3G antennas.
	Camera flash	This LED flash can be used as a light source when the ambient light is not bright.
	NFC antenna	The tablet is equipped with a NFC antenna.

Hardware

This section identifies various components and the hardware of the tablet - it is recommended that you become familiar with each before you operate the tablet.

The actual specifications may vary depending on the model you purchased.

- *This tablet does not support CD/DVD/Blu-ray Disc™.*
- *Content that is copyright protected or has limited access rights, cannot be played on this tablet.*

Processor

CPU	Your tablet is equipped with an nVIDIA® Tegra™ 4 Mobile Processor.

Under certain operating conditions, e.g., very high ambient temperatures, your tablet might automatically make slow down the system performance in order to maintain a reasonable system temperature. This is a normal protective feature and you might not be able to manually adjust the system performance during this period.

Memory

Memory on board	This tablet is equipped with a 2GB memory on board. The actual amount of usable system memory will be less than the installed memory modules. This tablet does not support memory expansion.
Flash Memory	This tablet is equipped with a flash memory.

Power

Battery	The tablet is powered by one lithium-ion battery.
AC adaptor	The AC adaptor provides power to the system and charges the battery when it is low. As the AC adaptor is universal, it can receive a range of AC voltages from 100 to 240 volts, however you should note that the output current varies among different models. Using the wrong adaptor might damage your tablet.

Display

The tablet's internal display panel supports high-resolution video graphics and can be set to a wide range of viewing angles for maximum comfort and readability.

Display panel	25.7cm (10.1") LCD screen configured with the following resolution: ■ 2560 horizontal x 1600 vertical pixels
Graphics controller	The graphics controller maximizes display performance.

Multimedia

Web Camera	Web Camera is a device that allows you to record video or take photographs with your tablet. You can use it for video chatting or video conferences by using a communication tool.

Communications

Bluetooth	Bluetooth wireless communication function eliminates the need for cables between electronic devices such as computers, printers and mobile phones. When it is enabled, Bluetooth will provide the wireless personal area network environment which is safe and trustworthy, that is quick and easy.
Wireless LAN	The tablet is equipped with a Wireless LAN/ Bluetooth combo module that is compatible with other Wireless LAN systems based on Direct Sequence Spread Spectrum/Orthogonal Frequency Division Multiplexing radio technology that complies with the IEEE 802.11 Standard.
3G	Some models are equipped with a 3G module.
NFC	Some models are equipped with a NFC (Near Field Communication) module. It allows data share between proximate devices.

Using the tablet for the first time

This section provides basic information about how to start using your tablet. It covers below steps followed by the details.

- Connecting the AC adaptor
- Turning on the power
- Initial Setup

- Turning off the power

- *Use a virus-check program and make sure it is updated regularly.*
- *Never format storage media without checking its content - formatting destroys all stored data.*
- *It is a good idea to periodically backup internal storage of the tablet to an external media. General storage media is not durable or stable over long periods of time and under certain conditions may result in data loss.*

Connecting the AC adaptor

When battery power becomes low, you must charge it.

Use only the tablet connected to an AC power source to charge the battery. Never attempt to charge the battery with any other charger.

The AC adaptor can automatically adjust to any voltage ranging from 100 to 240 volt and to a frequency of either 50 or 60 hertz, enabling you to use this product in almost any country/region. The adaptor converts AC power to DC power and reduces the voltage supplied to this tablet.

Attach the AC adaptor when you need to charge the battery or you want to operate from AC power. It is also the fastest way to get started, because the battery will need to be charged before you can operate from battery power.

- *Always use the TOSHIBA AC adaptor that was included with your tablet, or use AC adaptors specified by TOSHIBA to avoid any risk of damage to the tablet. Use of an incompatible AC adaptor could cause fire or damage to the tablet possibly resulting in serious injury. TOSHIBA assumes no liability for any damage caused by use of an incompatible adaptor.*
- *Never plug the AC adaptor into a power source that does not correspond to both the voltage and the frequency specified on the regulatory label of the unit. Failure to do so could result in a fire or electric shock, possibly resulting in serious injury.*
- *When you connect the AC adaptor to the tablet, always follow the steps in the exact order as described below. Connecting the plug to a live electrical outlet should be the last step otherwise the DC output plug could hold an electrical charge and cause an electrical shock or minor bodily injury when touched. As a general safety precaution, avoid touching any metal parts.*

- *Never place your tablet or AC adaptor on a wooden surface, furniture, or any other surface that could be marred by exposure to heat since the tablet base and AC adaptor's surface increase in temperature during normal use.*
- *Always place your tablet or AC adaptor on a flat and hard surface that is resistant to heat damage.*

1. Connect the power cord to the AC adaptor.

Figure 3-2 Connecting the AC adaptor 1

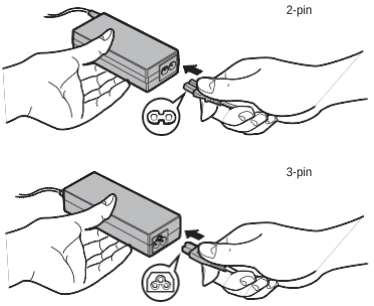

Depending on the model, either a 2-pin or 3-pin AC adaptor will be bundled with the tablet.

2. Connect the AC adaptor's output plug to the DC IN 12V jack on your tablet.

Figure 3-3 Connecting the AC adaptor 2

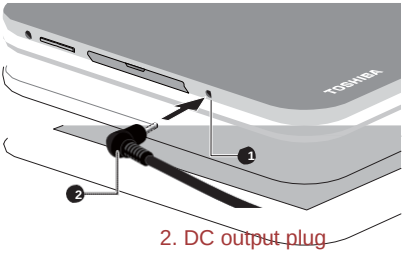

1. DC IN 12V jack 2. DC output plug

3. Plug the AC adaptor into a live wall outlet.

Turning on the power

This section describes how to power up your tablet.

Press & hold **Power** button for two seconds to turn on the tablet.

Figure 3-4 Turn on the tablet

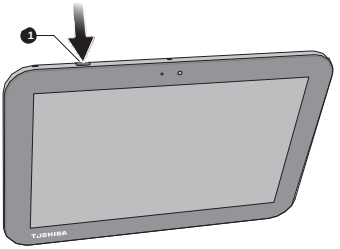

1. Power button

Initial Setup

The Setup Screen will be the first screen displayed when you turn on the power. Setup your tablet according to the following steps:

1. Choose your preferred system language and tap **Start** to begin with the initial setup process.
2. Connect to a Wi-Fi network.
   You can tap **Skip** and turn Wi-Fi on later in **Settings** app.
3. Sign in with a Google™ account.

   If you don't have one, tap **No**.
4. Register for a Google account by tapping **Get an account**.

   You can also skip this step by tapping **Not now**.
5. Choose whether to use **Google Location Service™** and tap ▶ to continue.
6. If the tablet is not connected to a Wi-Fi network, set the date and time and tap ▶ to continue.
7. Enter your name to personalize some apps. Tap ▶ to continue.
8. Tap **Learn more** to read the privacy policy and other terms. Tap ▶ to agree.
9. Your tablet is now set up and ready to use. Tap **Finish** to exit Setup Screen.

Turning off the power

If you are not going to use your tablet for a long time, shut it down. You can also turn the LCD off in order to extend battery life.

Shut down the tablet

When you shut down the tablet, no data will be saved. The tablet will boot to the operating system's main screen the next time it is turned on.

1. If you have entered data, either save it to flash memory or to other storage media.

- *Never turn off the power while an application is running. Doing so could cause loss of data.*
- *Never turn off / disconnect the power , or remove external storage media during data read/write. Doing so can cause data loss.*

2. Turn off or remove any peripheral devices connected to the tablet.
3. Press & hold **Power** button for two seconds and select **Power off** and then **OK** to turn off the tablet.

- *In any emergency case, you can also press & hold **Power** button for about 6 seconds to force power off.*
- *Do not turn the tablet back on immediately - wait a short period to avoid any potential damage.*

Turning the LCD off/on

You can turn the LCD off (while the system is still running) in one of the following ways:

- To turn it off manually: Press **Power** button.
- To turn it off automatically: Set the sleep timeout in **Settings** app.

To turn the LCD on:

- Press **Power** button once again.

Unlocking your screen

After turning on the LCD, the screen remains locked. You can unlock the screen in the following way:

- Press & hold the lock icon ( ) and slide it across the unlock icon ( ).

  You can also slide across other icons to allow quick and easy access from the lock screen.

If you have set up a screen lock other than Slide, the method of unlocking the screen will be different. See Security section for other ways to protect your tablet and privacy.

Care and use of the battery

This section provides the important safety precautions in order to handle your battery properly.

Refer to the enclosed **Instruction Manual for Safety and Comfort** for detailed precautions and handling instructions.

- *The lithium ion battery can explode if not handled or disposed of properly. Dispose of the battery as required by local ordinances or regulations.*
- *Charge the battery only in an ambient temperature between 5 and 35 degrees Celsius. Otherwise, the electrolyte solution might leak, battery performance might deteriorate and the battery life might be shortened.*
- *Never try to remove or replace the battery by yourself which may possibly result in serious injury. Please contact an authorized Toshiba service provider, if necessary.*

Charging the battery

When the battery power becomes low, you must charge it to avoid losing any data.

Procedure

You can charge the battery when the tablet is either on or off by connecting the AC adaptor.

- **Off**

  An icon shaped like an actual battery - a battery meter with flashing borders appears in the center of the screen allowing you to keep track of the battery level. When the battery is fully charged, the meter reaches its full capacity.
- **On**

  Likewise, a battery meter on the right side of the System Bar indicates the battery level.

Battery charging time

The following table shows the approximate time required to fully charge a discharged battery when the AC adaptor is connected to the tablet.

Battery type	Charging time
Battery (2 cell, 31.3Wh)	about 8 hours

Please be aware that the charging time when the tablet is on is affected by ambient temperature, the temperature of the tablet and how you are using the tablet - for example if you make heavy use of external devices then the battery might get scarcely charged up.

Battery exhausted time

The following table shows the approximate exhausted time of a fully charged battery.

Battery type	Time
Battery (2 cell, 31.3Wh)	about 10 hours (in use) about 9 days (sleep mode)

Please be aware that the battery exhausted time will be affected by how you are using the tablet.

Battery charging notice

The battery may not begin charging immediately under the following conditions:

- The battery is extremely hot or cold (if the battery is extremely hot, it might not charge at all). To ensure the battery charges to its full capacity, you should charge it at room temperature of between 5°C to 35°C (41°F to 95°F).
- The battery is nearly completely discharged. In this instance, the tablet can't be turned on immediately. You should leave the AC adaptor connected for a few minutes and the battery should begin charging. A battery meter icon ( ) will appear indicating the charging status.

The indicator may show a rapid decrease in battery operating time when you try to charge a battery under the following conditions:

- The battery has not been used for a long time.
- The battery has completely discharged and been left unattended for a long time.

In such cases you should follow the steps as detailed below:

1. Fully discharge the battery when powered on until the system automatically turns the tablet off.
2. Connect the AC adaptor to the Micro USB port on the tablet, and to a wall outlet that is supplying power.
3. Charge the battery until the battery meter reaches its full capacity.

Repeat these steps two or three times until the battery recovers normal capacity.

Chapter 4

Basics

This chapter describes the basic operations of your tablet and the Home screen.

Using the touch screen

You can use your finger to manipulate icons, buttons, menu items, the onscreen keyboard, and other items on the touch screen.

- **Tap**

  Simply tap your finger on the touch screen to act on items on the screen, such as application and settings icons, to type letters and symbols using the onscreen keyboard, or to tap onscreen buttons.
- **Press & hold**

  Press & hold an item on the screen until an action occurs.
- **Drag**

  Press & hold an item for a moment and then, without lifting your finger, move your finger on the screen until you reach the target position. You can drag items on the Home screen to reposition them.
- **Swipe or slide**

  To swipe or slide, you quickly move your finger across the surface of the screen, without pausing when you first touch it (so you don't drag an item instead). For example, you slide the screen up or down to scroll a list.
- **Double tap**

  Tap quickly twice on a webpage, map or other screen to zoom.
- **Pinch**

  In some apps (such as Browser and Gallery), you can zoom in/out by placing two fingers on the screen at once and pinching them together or spreading them apart.

Using the Stylus Pen

Some models are provided with a Stylus Pen.

You can use the Stylus Pen to execute actions and enter data. Hold the Stylus Pen in a natural position and tap, press or trace on the screen lightly.

Figure 4-1 Stylus Pen

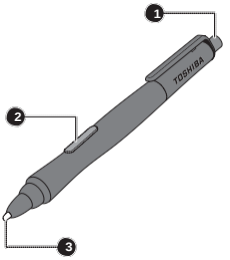

1. Eraser button
2. Side button
3. Pen point

Eraser button	You can use this button as an eraser in some applications that support eraser function. These applications enable you to select and delete notes or sketches with a one-touch action.
Side button	You can use this button as function button. The function will be defined by each application.
Pen point	You can use pen point to operate same like as by your finger.

Observe the following precautions on the handling of the Stylus Pen.

- *In order to avoid damages to the display screen, please refrain from doing anything other than the specified operation methods. Failure to do so could cause a malfunction or characteristic deterioration.*
- *Do not tap or press the Stylus Pen forcefully against the display as this could damage the Stylus Pen and the screen itself.*
- *Avoid using or keeping the Stylus Pen in areas where the temperature can change rapidly or in places, such as a car, where the Stylus Pen is exposed to direct sunlight. Store the Stylus Pen without any pressure being applied to the buttons. Failure to do so could cause a malfunction or characteristic deterioration.*
- *The Stylus Pen is composed of precision parts. Do not drop the Stylus Pen. Strong impact causes a malfunction or characteristic deterioration.*
- *Do not apply excessive force to the Stylus Pen point and the side button. Excessive force applied to these parts causes short life or characteristic deterioration.*
- *Avoid water entering the Stylus Pen or condensation forming within it as either condition will cause a malfunction.*
- *Do not disassemble the Stylus Pen. It causes maladjustment or short life.*

- *Do not stain the Stylus Pen with cosmetics or chemicals as this will cause a deterioration in appearance. Use a glass wiping cloth or dry cloth to clean the Stylus Pen. Do not use volatile liquids such as alcohol, thinner or petroleum benzine to clean the Stylus Pen.*
- *Do not apply excessive force to the Stylus Pen point as a bent or deformed pen point will cause a malfunction.*
- *Keep the small parts of the Stylus Pen, such as the pen point or the knob of the side button, away from infants and small children to prevent the accidental ingestion by them.*
- *Do not use a ball point pen instead of the Stylus Pen included with the product.*
- *Do not continue to use a broken pen point as this may result in scratching of the display screen.*

TOSHIBA is not liable for any problems arising on the products due to the use of the Stylus Pen in an environment where the above conditions are not satisfied or because of its use by unspecified number of users.

Pen actions

You can use the Stylus Pen to enter data, start programs, move objects and execute other actions.

Single tap

Lightly tap the tip of the Stylus Pen on an object and lift it immediately to execute an action.

Double tap

Lightly tap the tip of the Stylus Pen twice on an object and lift it immediately to execute an action.

Press & hold

Touch the tip of the Stylus Pen to the display screen and hold it there to display a pop-up menu or other action.

Drag

Touch the Stylus Pen on the screen. Without lifting the Stylus Pen, drag it across the screen to select text or objects.

Drag and drop

Touch the Stylus Pen on the screen to select an object. Without lifting the Stylus Pen, drag it across the screen. Lift the Stylus Pen to drop the object to a new location.

The Pen actions listed above may vary depending on the applications.

Replacing the pen tip

The pen tip of the Stylus Pen can be replaced with a new one which is provided when it is worn. To replace the pen tip, follow the steps as described below:

1. Pinch the tip with a draw-out tool and pull it out.
2. Insert a new pen tip into the Stylus Pen carefully, and press it securely.

Figure 4-2 Replacing the pen tip

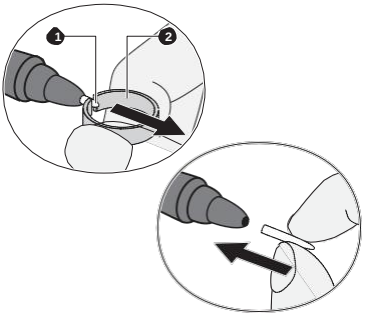

1. Pen tip 2. Draw-out tool

- *Do not continue to use a broken pen tip as this may result in scratching of the display screen. When the pen tip breaks, replace it with one of the refills delivered with the Stylus Pen. When these refills have run out, you can purchase a new pen set from a TOSHIBA authorized dealer.*
- *Always use the refills delivered with the Stylus Pen. Use of an incompatible refill may cause a malfunction or characteristic deterioration.*

- *A short and worn pen tip is difficult to pull out. Replace the pen tip with a refill before it becomes too short to remove.*
- *It is recommended that you keep another pen set as a spare. You can buy replacement pen sets from your TOSHIBA authorized dealer.*

Getting to know the Home screen

The Home screen is your starting point for using all the installed apps on your tablet. You can customize the Home screen to display the widgets, app shortcuts, wallpapers and other shortcuts you prefer.

Figure 4-3 Home screen

1. System bar
2. App shortcuts
3. All Apps
4. Memo button*
5. Favorite tray
6. Back
7. Home
8. Recent apps

* Provided with some models.

Item	Description
System bar	The System bar is located permanently at the top of the screen. The notifications icons and notification panel are on the left, and the status icons and quick settings panel are on the right.
App shortcuts	Tap to open an app.
All Apps	Tap to see all your apps, widgets, my favorites and my recent apps.
Memo button	Tap to save the current screen into your memo gallery in **TruNote** app.
Favorite tray	The Favorite tray is located at both left and right side of **All Apps**. You can move your favorite apps to Favorite tray.
Back	Return to the previous screen.
Home	Return to the default Home screen.
Recent apps	Tap to see the thumbnails of your recently used apps.

*The **Back**, **Home** and **Recent apps** icons may fade away or shrink into dots after a short period of time without operation, depending on which apps you are using.*

To bring them back, tap their locations.

- Swipe left or right to see more Home screen panels.
- Use panels to organize your widgets and app shortcuts. See *Customizing the Home screen* section for the details.

Opening and switching applications

The **All Apps** main screen holds icons for all the apps and widgets on your tablet.

Tap **WIDGETS** tab to view widgets that you have downloaded and installed. Widgets show you the latest updates of apps.

Tap **MY FAVORITES** tab to view the applications that are frequently used. This tab can hold 24 applications in total.

Tap **MY RECENT APPS** tab to view the applications that are recently used. This tab can hold 24 applications in total.

To manage all your apps and widgets, tap **Settings -> Apps** under **DEVICE**.

Opening an application

You may open an application by:

- Tapping its icon on the Home screen.
- Tapping its icon from the **All Apps** main screen.

Switch to a recently used application

You may switch to recently used application by:

- Tap **Recent apps ( )** and select an application that you want to switch to.

  To remove an application, swipe the thumbnail upwards or downwards.

You can find more recently used applications by tapping **MY RECENT APPS** tab on the **All Apps** main screen.

Monitoring your tablet's status

The left and right side of the System bar displays icons indicating that you've received notifications, the current time, and icons indicating the tablet's status.

Status icons

The icons in the right of the system bar indicate the status of your tablet, such as current time.

Notification icons

The icons in the left of the system bar indicate different types of notifications. In addition to system notification icons, applications you installed on your tablet may use their own notification icons.

Quick Settings

You can use Quick Settings to change frequently used settings. Press & hold the status icons area till a flashing line appears, and then swipe down the flashing line to open Quick Settings panel. Tap the area outside of the Quick Settings panel to close it.

The current user is shown in Quick Settings panel. You can also find the following settings:

- **Brightness**

  Tap to set the brightness of the display.
- **Settings**

  Tap to open **Settings** app main screen.
- **Wi-Fi**

  Tap to open **Wi-Fi** option in **Settings** app.
- **Auto rotate**

  Tap to lock or unlock the auto-rotatation of the screen orientation as you turn your tablet sideways.
- **Battery**

  Tap to open **Battery** option in **Settings** app.
- **Airplane mode**

  Tap to turn on/off airplane mode. All wireless radios are disabled when it is turned on.
- **Bluetooth**

  Tap to open **Bluetooth** option in **Settings** app.
- **Power management**

  Tap to apply **Power save**, **Custom** or **Default** profile. Keep tapping until the profile you want to apply appears.
- **Video enhancement**

  Tap to turn on/off video enhancement.
- **Audio enhancement**

  Tap to turn on/off audio enhancement.

More settings could be shown in Quick Settings panel depending on your use of the tablet, such as Alarm.

*You can also open the Quick Settings panel in the lock screen if **Screen lock** is set to **Slide**.*

Managing Notifications

Notification icons report the arrival of new messages, calendar events, and alarms, as well as ongoing events.

When you receive a notification, its icon appears in the left of System bar.

You can open the Notifications panel to view a list of all your notifications. Depending on your settings and the model of your tablet, you may also hear a notification sound.

Adjusting sound volume and other general notification settings is described in *Sound* section in "Settings" chapter.

Applications that produce notifications, such as **Email**, have their own settings, which you can use to configure whether and how they send notifications. See the sections describing those applications for details.

Opening the notifications panel

Press & hold the notification icons area till a flashing line appears, and then swipe down the flashing line to open notifications panel that lists the current notifications. Notifications of ongoing activities are listed first, followed by notifications of events, such as a new mail notification.

*You can also open the notifications panel in the lock screen if **Screen lock** is set to **Slide**.*

Responding to a notification

To respond to a notification, follow the below steps:

1. Open the notifications panel.

   Your current notifications are listed in the panel, each with a brief description.
2. Tap a notification to respond to it.

   The notifications panel closes. What happens next depends on the notification.

Dismissing a notification

You can dismiss a notification by sliding it sideways. However, some notifications can not be dismissed.

Closing the notifications panel

Tap the area out of the notifications panel to close the notifications panel.

Locking your screen

You can lock your screen so that only you can unlock it to access your data, run applications and so on. See *Security* section for other ways to protect your tablet and privacy.

Locking your screen with a Pattern lock

For example, you can use a Pattern lock to lock your screen with following steps.

1. Open the security settings by tapping **All Apps -> Settings -> Security**.
2. Tap **Screen lock -> Pattern**.

The first time you open it, a short tutorial about creating an unlock pattern will appear. Then you're prompted to draw and redraw your own pattern. Follow the onscreen instructions to finish the creation.

The next time you turn on your tablet or wake up the screen, you will be prompted to draw your unlock pattern to unlock the screen.

Capturing your screen

You can capture a screenshot by simultaneously pressing and holding **Power** and **Volume down** button for about 2 seconds. The tablet will show the preview for a few seconds and save it.

All the screenshots you captured can be viewed in Gallery or TOSHIBA File Manager. For more information, please refer to Chapter 5, Applications.

Customizing the Home screen

You can add application shortcuts or widgets to Home screens. You can also change the wallpaper.

Adding an item to the Home screen

To add an item to the Home screens, follow the steps listed below:

1. Tap **All Apps** on the Home screen.
2. Tap **APPS**, **WIDGETS**, **MY FAVORITES** or **MY RECENT** tab. You can also swipe left or right to move between screens.
3. Press & hold an item and the Home screen will appear. Drag it to the place you want.

   Settings may be required before you can operate a widget. You can tap widgets to open them.

You can resize some widgets on the Home screen by following below steps:

1. Press & hold the widget until it moves upwards and a resize handle will appear on each side.

2. Drag the resize handle to resize the widget.

The number of widgets you can add depends on the size of each widget. If there is not enough room, the widget can't be added.

Moving an item on the Home screen

To move an item on the Home screen, follow the steps below:

1. Press & hold the item you want to move until its icon is magnified. Don't lift your finger from the screen.
2. Drag the item to a new location on the screen.

   It will pause at the left or right edge of the screen to drag the item onto extended Home screen.
3. When the item is at expected place, lift your finger.

Removing an item from the Home screen

To remove an item from the Home screen, follow the steps below:

1. Press & hold the item you want to remove until its icon moves upward.

   × Remove appears on the top.
2. Drag the item to **× Remove**.
3. When the item icon glows red, lift your finger.

Changing the wallpaper

Wallpaper is an image used to replace the default background of your Home screen.

1. Press & hold anywhere on the Home screen that is not occupied.
2. Tap an option to select a wallpaper source.
3. Select a wallpaper.
4. Tap **Set wallpaper**.

Creating a grouped folder

Folders provide an easy way to organize and manage your apps shortcuts. You can group several app icons into a folder.

Drag and drop app icons on top of each other to automatically create a grouped folder. To rename the created folder, tap to open it and tap its name at the bottom to enter a new one.

Press & hold an icon in the folder and drag it to the Home screen. When the folder has only one app icon, this folder will be automatically ungrouped leaving the last icon on the Home screen.

Changing the Screen Orientation

You can change the screen orientation from Landscape to Portrait mode by rotating the tablet sideways (and vice versa). The screen orientation automatically changes according to the rotation angle detected.

You can lock the auto rotation and use the tablet always in Portrait or Landscape mode. These settings can be performed in the Quick Settings. Please refer to the *Quick Settings* section for details.

In the Portrait mode, installation/uninstallation operation may not work for some of the drivers/utilities. If it occurs, switch to the Landscape mode.

Managing Tasks and Applications

You can manage some of the running applications by following the steps below:

1. Tap **All Apps -> Settings -> Apps**.
2. Tap an item you want to manage from **DOWNLOADED/RUNNING/ALL** tab.

- *Please refer to Apps section in Settings chapter for details.*
- *In order to improve the performance of your tablet, close some of the running applications.*

Connecting to a computer

With a Micro USB port on the tablet, you can connect your tablet to a computer for data transfer.

To connect to a computer:

1. Plug the Micro USB connector of the USB cable into the Micro USB port on this tablet.

Figure 4-4 Connecting an USB cable

1. Micro USB port 2. Micro USB connector

2. Plug the other end of the USB cable into the USB port on the computer.

Depending on your settings, your tablet will be recognized as a removable MTP (Media Transfer Protocol) device or PTP (Picture Transfer Protocol) device allowing you to access its contents from a computer.

If your computer does not support MTP, try using PTP instead.

To remove this tablet from a computer:

1. Make sure all file operations are finished.
2. Unplug the tablet from your computer.

Make sure the connector is properly aligned with the socket. Do not try to force the connection, doing so can damage the connecting pins.

Factory Reset

The tablet provides you with the function to reset it. Before executing the reset, you need to backup the system settings, application settings, user installed applications and data in the internal storage.

To perform the factory data reset, please follow the steps below:

1. Tap **All Apps -> Settings -> Backup & reset -> Factory data reset -> Reset tablet -> Erase everything**.
2. The factory data reset will be done.

Please note that the following data will be erased:

- *System settings and application settings*
- *User installed applications*
- *Internal storage files, such as music or photos*

Data in the removable media will not be erased.

Chapter 5

Applications

This chapter describes the usage of applications & widgets.

Your tablet has some Google Mobile™ services installed and the availability of the applications may vary depending on your country or region. Some applications will be automatically hidden after the first power on.

Analog clock

Analog clock is a widget to display a clock on the Home screen based on the system time so that you can watch time directly.

You can also use it to set an alarm clock, timer and stopwatch. For details, please refer to the *Clock* section.

Browser

Browser is used to view webpages and to search for information on the web.

To open the Browser, tap **All Apps -> Browser**.

Browser can also open when you tap a web link, for example, in an email or text message.

When you open Browser, the last webpage you viewed is displayed. If you have not used Browser recently, your home page will open.

Go to a webpage

1. Tap the URL box on the top of the Browser screen. If the URL box isn't visible, drag the page down until the URL box comes into view.
2. Enter the address (URL) of the webpage by using the onscreen keyboard.
3. Select a suggestion or enter an address and tap **Go** with the onscreen keyboard.

- *The **Browser** may not display some webpages correctly if the web page has a complicated layout. This is dependent on the web page.*
- *The **Browser** does not support file uploading function for specific websites.*

- *The **Browser** might connect to a "mobile" website by default rather than a "PC" web site. Depending on the website, if you want to access the PC website, please tap **Menu** (⋮) and check **Request desktop site**.*

Zoom in or zoom out on a webpage

You can zoom in or out a webpage in either of the following ways.

- Double tap at the area where you want to zoom.
- Pinch two fingers together or apart to zoom out or zoom in on a webpage.

Multiple Browser tabs

You can open up to sixteen tabs and switch between them.

Pages you view in incognito tabs will not leave any traces like browser history or search history on your tablet, however any files you downloaded will be saved.

Open a new Browser window

You may open a new Browser window in either of the following ways:

- Tap **Menu** (⋮) and select **New tab** or **New incognito tab**.
- Tap + beside the last tab.

New window will open your home page.

Switch between Browser windows

You may switch between different Browser windows by tapping the tabs of browser windows.

Close a Browser window

You may tap the cross on the tab to close the current browser window.

Bookmarks

You may bookmark webpages to open it conveniently.

1. Tap the pentagram icon (☆) besides the URL bar.
2. Enter a **Label** for the website or use the default **Label**.
3. Tap **OK** to add it to **Bookmarks**.

   You can also add it to **Home screen** or **Other folder** by tapping and choosing from **Add to** menu.

You may open the website from the bookmarks.

1. Tap the bookmark icon (★) at the upper right corner of the screen to go to bookmarks.

2. Tap a page in the list to open it.

View your Browser history

As you browse the web, Browser will keep track of the pages you visit, to help you find your way back later.

1. Tap the bookmark icon ( ) at the upper right corner of the screen.
2. Tap the **HISTORY** tab.

   The pages you've visited are grouped chronologically. Bookmarked pages have a star.
3. Tap a time period to view the pages you've visited.
4. Tap a page in the history to reopen it.

View your Saved Pages

Pages you viewed in Browser can be saved for future reading. This is especially useful when your tablet is offline.

1. Tap the bookmark icon ( ) at the upper right corner of the screen.
2. Tap the **SAVED PAGES** tab.

   The pages are grouped chronologically.
3. Tap a page you want to open.

Web page options

By tapping **Menu** ( ), you can access a number of browser options like: **Refresh , Forward , New tab**, **New incognito tab**, **Find on page**, **Share page**, **Request desktop site , Save for offline reading**, **Page info**, **Settings**.

Browser settings

You can configure a number of Browser settings, including some that you can use to manage your privacy.

To open the Browser settings screen, tap **Menu** ( ) -> **Settings**.

There are six tabs: **General**, **Privacy & security**, **Accessibility**, **Advanced , Bandwidth management** and **Labs**.

Quick controls setting

Check **Quick controls** under **Labs**, the URL bar and the functional icons will be hidden and you can work with the Browser screen by quick controls. To open it, slide your thumb from the left or right edge.

Calculator

You can use **Calculator** to solve simple arithmetical problems or use its advanced operators to solve more complex equations.

1. Open Calculator by tapping **All Apps -> Calculator**.
2. Enter numbers and arithmetical operators on the basic screen.
3. Press & hold the Calculator's display to select **Copy** or **Cut** the numbers.
4. Tap **Clear** icon ( ) to delete the last number or operator you entered. Press & hold this icon to delete everything in the display.
5. Tap **CLR** to clear the display after calculation.

Calendar

You can use **Calendar** to remind on dates, events or appointments.

Add events to Calendar

You can add events to **Calendar** by following these steps:

1. Tap any blank period on your calendar or the **New Events** icon ( ) on the top right corner of **Calendar** screen.
2. Enter **Event name** and set details for this date.

   You can add guests by entering their email addresses.
3. Tap **Done** to save.

Camera

Camera is a combination of camera and camcorder that you can use to take and share pictures/videos. Pictures and videos can be viewed in the Gallery.

Open Camera and take pictures/videos

You can take pictures and shoot videos with the Camera.

To open the Camera, tap **All Apps -> Camera**.

Camera will open, ready to take a still picture. You can switch **Camera** to video or panorama mode anytime by tapping the proper icon in option 3 of the following figure.

The back camera is set for default. You can switch to front camera by tapping icon in option 1 of the following figure when in the Photo mode or tapping icon when in the Video mode.

Figure 5-1 Camera screen

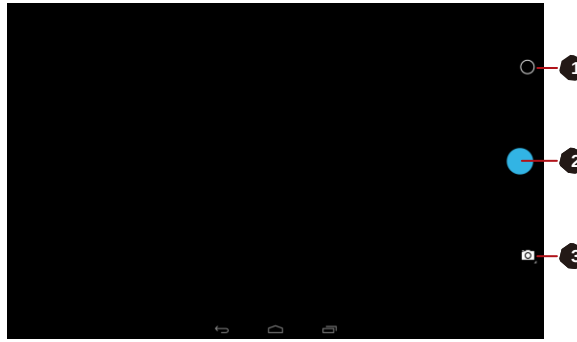

1. Photo/Video options
2. Take a photo/video
3. Choose photo, video or panorama mode

Panorama mode

Panorama mode allows you to take multiple subsequent photos and the tablet automatically join them together to create a single image with a wide-angle view.

After the camera is set to panorama mode, you will select how shots will be stitched - slowly move the camera left to right or right to left.

Review your pictures/videos

You can review the pictures/videos you've taken in **Camera**.

- On the Camera screen, swipe left to open the **Gallery**.

For details, refer to the *Gallery* section.

Photo options

Several options are available by tapping the Photo/Video options icon ( ).

- **White balance ( ):** Adjust the lighting conditions.
- **Exposure ( ):** Choose the value to change the exposure rate.
- **Quick settings ( ):** Adjust the Scene mode, Store location and Picture size.
  - **Scene mode:**Choose your environment.
  - **Store location:** Switch to **ON** to add location information to pictures you take.
  - **Picture size:** Choose the size of the pictures you take.

Video options

Similarly, in Video mode, the following options are available on video record screen.

- **White balance ( ):** Adjust for lighting conditions.
- **Quick settings ( ):** Adjust the Scene mode, Store location and Picture size.
  - **Time lapse**: Choose a time interval for time lapse recording.
  - **Video quality:** Tap to select the quality of the videos you take.
  - **Store location:** Switch to **ON** to add location information to videos you take.

Clock

In addition to displaying the date and time, you can use Clock to set an alarm, timer and stopwatch.

To open Clock, tap **All Apps -> Clock**.

Working with clock

You can change Clock settings as follows:

- Tap the icon ( ) to display a list of cities with different time zones. Check to show the Clock of a city on the Clock screen. You can select more than one city.
- Tap the icon ( ) to find more settings for Clock:
  - **Night mode:** Select to view local time with very dim display.
  - **Settings:** The following options are displayed:

    Style: Tap to open a dialog where you can choose the style of the Clock as **Analog** or **Digital**.

    Automatic home clock: Check to add a Clock for home when travelling in an area with different time zone.

    Home time zone: Tap to open a list of time zones. Check to select a time zone for your home.

Setting an alarm

1. Tap the icon ( ) on the left bottom of the screen.
2. Tap an existing alarm clock to change its time and other settings.

   Or tap the icon ( ) to add a new one.

Tap the icon ( ) to find more settings for alarms:

- **Silence after:** Select the time when you want your alarm to stop ringing.
- **Snooze length:** Select how long your alarm will snooze after you turned it off.
- **Alarm volume:** Tap to open a dialog where you can drag a slider to adjust the volume.

- **Volume buttons:** Tap to open a dialog where you can choose if you want your **Volume buttons** to **Snooze**, **Dismiss**, or **Do nothing**.

Setting a timer

1. Tap the timer icon ( ).
2. Enter the period of time you want.

   Tap **Clear** icon ( ) to delete the last number you entered. Press & hold this icon to delete everything in the display.
3. Tap **Start** to start.

   After starting a timer, you can work with it as follows:
   - Enter a name: Tap ( ).
   - Pause a timer: Tap **STOP**.
   - Tap ( ) to add one minute to the current time. One minute can be added with each tap. You can tap several times to add more minutes.
   - Delete a timer: Tap ( ).
   - Repeat a timer: Tap ( ).
   - Tap ( ) to add more timers.

The timer beeps when the time is up. It will keep beeping until you tap **STOP**.

Using the stopwatch

1. Tap the icon ( ) to open the stopwatch.
2. Tap **START** to start time counting. You can add more laps when the stopwatch is running by tapping the icon ( ).
3. Tap **STOP** to stop. Then you can either tap **START** to continue or tap the icon ( ) to open a new stopwatch.

   Tap ( ) to share the results via Bluetooth, email, and more.

Downloads

You can use the **Downloads** application to view and manage downloaded files.

To open the **Downloads**, tap **All apps -> Downloads**.

Email

You can use the **Email** application to read and send emails. **Email** includes a wizard that makes it easy to configure it for several popular email service providers.

To open the **Email**, tap **All Apps -> Email**.

After you add an email account, next time when you access Email it will open to the last screen you were viewing. If you have not used Email

recently, it will display the contents of your Inbox (if you have only one account) or the Accounts screen (if you have multiple accounts).

If you have configured Email to send and receive emails from more than one account, you can view all emails sent to all accounts in your Combined Inbox.

Read an email

You can read emails in the Inbox or other folders for individual accounts.

1. Open the combined Inbox, an account's Inbox or another folder of emails.
2. Tap the email to read. The email opens in a screen with information about who sent it, the date it was sent and related information on the top, followed by the contents of the email.

Send an email

You can send an email to your contacts or to other people.

To send an email:

1. Tap ( ) and enter the recipient, subject and message.
2. Tap ( ) to add attachments.

When you enter text in the **To**: field, your tablet shows possible matches from your **Contacts** list, if any exist.

Respond to an email

You can reply to or forward an email that you've received. You can also delete emails and manage them in other ways.

While reading an email, tap one of the icons ( ) on the top to execute **Reply**, **Reply all**, or **Forward** operations.

Manage email accounts

The Email application enables you to add email accounts from popular web-based email service providers. You can also delete an email account or edit an email account settings.

- To add an email account:

  Tap the icon ( ) and select **Settings**. On the Settings screen, tap **ADD ACCOUNT**.
- To delete an email account:

  1. Tap the icon ( ) and select **Settings**.

  2. Tap the account you want to delete. On the **options** menu, tap **Remove account** and then tap **OK**.

- To edit an email account settings:

  Tap the icon ( ) and select **Settings**.

  You can make any changes to general, notification or server settings from this screen.

Gallery

You can use **Gallery** to view pictures and play videos that you've taken with the Camera, downloaded or copied onto your tablet.

Open Gallery

To view your pictures and videos, tap **All apps -> Gallery**.

Gallery shows the pictures and videos on your tablet, including those you've taken with Camera and those you downloaded from the web or other locations.

- *If you have a large number of pictures or videos on your tablet, it may take Gallery a few minutes when you open it to discover and organize them.*
- *Gallery will display all images and videos without distinction of internal or external storage.*

View and browse pictures/videos

All the albums are displayed in the screen.

1. Tap an album to open it and view its contents. The pictures and videos in the album are displayed in chronological order. You can view the pictures and videos in your albums in stacks, sorted by **Albums**,**Locations**,**Times**, **People** and **Tags**.
2. Tap a picture or video in an album to view it.

   You can pinch the picture by two fingers or apart to zoom in or zoom out. Slide left or right to view other pictures/videos.

   You can also return to the previous screen at any time by tapping Gallery icon ( ) on the top left of the screen.

Take pictures/videos

You can also tap the camera icon on the top right corner of the screen to take pictures or videos directly. Please refer to the *Camera* section for more information.

Work with pictures/videos

After opening a picture or a video, you can work with it as follows:

- Share photo or video: Tap to send the photo or video in a message, transfer it using Bluetooth, email, or post it online.
- Tap the icon ( ) on a photo screen to see details, delete, slideshow, edit, crop, or set as a contact photo or wallpaper. When tap it on a video screen, you will see details and can delete and trim your video depending on the video/audio codec.

The Google Play™ Music App

You can use the **Google Play Music** app to organize and listen to music and other audio files that are in your tablet, SD card or USB storage.

The app supports a wide variety of audio files formats so it can play music that you purchase from online stores, or copied from external storage and so on. For the details of supported formats, please refer to *TOSHIBA Media Player* in this chapter.

To open the Google Play Music app screen, tap **All Apps -> Play Music**.

Your Music library screen will open with tabs that you can tap to view your music library organized by **Recent**, **Albums**, **Artists**, **Songs**, **Playlists**, **Genres**, **All music**, or **On device only**.

Playing music

You can listen to music by using your tablet's built-in speakers.

To play music:

- Tap a song in your library to listen to it.

Working with playlists

You can create playlists to organize your music files into sets of songs, which you can play in the order you set or in a shuffle.

To create a playlist:

1. Tap sort tab on the Music library screen and choose **Playlists** tab.
2. Tap the icon ( ) and select **New playlist** to add a new playlist.
3. Enter a name and tap **OK** to save. The new playlist is added to the Playlist library.

You can add other songs that are playing in the **Now playing** screen in a playlist by tapping **Menu** and tapping **Add to playlist**.

Choose an existing playlist, or tap **New playlist** to create a new playlist.

To play, add to queue, delete and rename a playlist, press & hold the playlist.

People

People gives you quick and easy access to the people you want to get in contact with. Information about your contacts is shared with other applications, such as Gallery (for sharing photos and videos) and so on.

If you have more than one account with contact information, **People** merges duplicate contacts into a single entry. You can also manage that process manually.

Open People

To open your contact, tap **All Apps -> People**.

All of your contacts are displayed alphabetically in a scrolling list.

Tap a contact to view the details. Entries for communicating with the contact are followed by details. Tap a communication method to start texting or emailing the contact by using the listed number, address and so on.

Import and export contacts

If you have contacts stored in vCard format in the Internal storage, you can import them into Contacts on your tablet. You can also copy contacts from SD card by TOSHIBA File Manager. You can export contacts in vCard format to the internal storage for backup using TOSHIBA File Manager. You can also send a contact via email or Bluetooth.

Search for a contact

You can search for a contact by name.

1. Tap **Find contacts** (🔍). The search box appears.
2. Start entering the name or number of the contact you're searching for.

   As you type, contacts with matching names appear below the search box.
3. Tap a matching contact in the list to open its details screen.

Service Station

The Service Station utility is used to provide you with updates for both applications and system software. It will notify you when a new version of software is available, also it initiates for download & installation.

To open Service Station:

Tap **All Apps -> Service Station**.

When you run the Service Station for the first time, you are prompted to accept the access agreement. The agreement authorizes the utility to collect certain basic information about your tablet and send it to the TOSHIBA servers as part of the process of obtaining updates. Accept or Decline the agreement by tapping the buttons. While it is possible to decline the agreement, it is not recommended, as this means the Service Station utility will not run, and you will not be notified of new software updates for your tablet.

Main Window

The main window of this application includes four areas: **Menu**, **Buttons**, **Information** and **Check for Updates**.

- **Menu**

  Tap **Menu** icon (⋮), you can access the following options: **Select All Applications**, **View Hidden Update(s)**,**View Hidden Alert(s)**,**View Access Agreement** and **About**.

- **Buttons**

  Two buttons are displayed in this area:

  Software Updates: Tap to check the System and application updates. To view the hidden updates, tap **Menu** icon (⋮) and select **View Hidden Update(s)**.

  Alerts: Tap to check the alerts. To view the hidden alerts, tap **Menu** icon (⋮) and select **View Hidden Alert(s)**.

- **Information**

  The main part of the screen displays information such as the list of available updates, or more detailed information about a specific update.

- **Check for Updates**

  Tap the **Check for Updates** button, and the application will refresh the list of available updates.

  During normal operations, the Service Station will periodically check to see if there are any updates for your system. This is done automatically. If there are new updates available, you will be notified with the Service Station icon in the System bar of your tablet.

  While the Service Station will periodically check for updates in the background, you can request that it check for updates immediately.

- *It is not normally necessary to check for updates manually, as the utility checks for them automatically and informs you when one is available.*
- *Please connect the AC adaptor before updating.*
- *If the tablet has multiple users, system update is available only for owner account, while application update is allowed for all users.*

  You can also find the basic information about your system such as the version of the operating system, the tablet part number and serial number in this area.

Downloading Updates

When an update is available, it will appear on the information area of the screen. Tap the item displayed. More details for that item are displayed on the screen.

To download the update, tap the **Download** button. This will begin the download process. A progress indicator is displayed.

- *Tapping **Home** ( ) allows the download to continue while you use your tablet. A notification of the download completion will appear in the system bar.*
- *Tapping **Back** ( ) will abort the download process.*

Installing Updates

Once an update has been downloaded, it can be installed. If you are not able to see the information in System bar, go to the screen by launching the Service Station utility, or by tapping the download completion notice on the system bar.

Tap the **Install** button. This will launch the application installer. Continue with installation.

Downloading and Installing System Updates

Service Station will download both application and system updates. System updates require a reboot of your tablet.

Downloading a system update is the same as an application update.

Installing a system update is similar to an application update, but you will be reminded that the tablet will be rebooted during the installation process. Make sure to close any other applications and save all work prior to installing a system update.

It is important to ensure that a system update will not be interrupted after it has started. Plug in the AC power before starting the installation and don't turn the tablet off until the process has finished.

Please note that the system may reboot more than once during an system update, depending on the update itself.

This application only updates system area in the internal storage. User data area is retained after the system is updated.

TOSHIBA Media Player

TOSHIBA Media Player is a multimedia player where user can experience and enjoy outstanding multimedia playback.

TOSHIBA Media Player supports common multimedia playback such as video (e.g. H.264/AVC, MPEG-4), music (e.g. MP3, AAC-LC) and photo (e.g. JPEG, PNG).

To open TOSHIBA Media Player, tap **All Apps -> Media Player** from the Home screen.

TOSHIBA does not guarantee that all the audio/video files with the above coding will be played correctly.

TOSHIBA Media Player has five panels: **Music**, **Videos**, **Photos**, **Podcasts** and **File Transfer**. You can switch between these panels by swiping left/right.

TOSHIBA Media Player supports home network functions such as DMS (Digital Media Server), DMC (Digital Media Controller) and DMP (Digital Media Player).

- **Connectable Digital Media Servers**

  TOSHIBA Media Player supports browsing DMS that has search function only. That is, it only supports Windows Media Player Network Sharing Service in Microsoft® Windows® 7 and Microsoft® Windows® 8.
- **Connectable Digital Media Renderers**

  Toshiba Media Player is connectable with the following DMRs.
  - Microsoft Windows Media Player 12 in Microsoft Windows 7 and Microsoft Windows 8
  - Toshiba TV and Blu-ray Disc Player with DMR functions

- *Do not eject (or unmount) external media during contents search. This will cause music playback to stop.*
- *Some "double-byte" characters might not be displayed correctly. This is the Operating System limitation.*

TOSHIBA File Manager

TOSHIBA File Manager is a featured application that manages files and folders. It allows you to create, rename, copy, cut, paste or delete files and folders stored in both internal and external storage.

To open TOSHIBA File Manager, tap **All Apps -> File Manager** from the Home screen.

- *System files cannot be accessed by TOSHIBA File Manager.*
- *TOSHIBA File Manager may not be able to open a file without its associated application.*

Navigation

The main window of TOSHIBA File Manager is divided into four panels. Each panel's function is described as below.

- **Device panel**

  Device panel lists buttons of available storage devices. By default you will see **Internal Storage** and **Screen Capture** buttons. You are also allowed to add folder shortcut into this panel.
- **Address panel**

  Address panel shows you the current device name followed by relative (not full) path of current folder.
- **Control panel**

  Control panel contains several functional icons for file and folder operations.
- **Files and folders panel**

  This panel is divided into four categories: **ALL** ( ),**MUSIC** ( ), **VIDEOS**( ) and **PICTURES(**), you can tap to view as you want.

  Explore files and folders with optional layout in this panel. You can easily read and collect additional information such as size, thumbnail of the files, name and last modified date and time of the folders. When items are selected, they are tagged with a tick.

Storage Structure

The following table lists the description of each storage device icon in the Device panel.

TOSHIBA File Manager only shows the storage device connected to the tablet.

Name	Description
Internal Storage	All contents (excluding system files) in the tablet's internal storage are shown.
SD card	All contents in SD card are shown.
USB Storage (0-7)	Supporting up to eight USB storage devices connected to tablet.
Screen Capture	Screenshots image files are shown. Please refer to the *Capturing your screen* section for more information.

Operations on Files & Folders

Basic operations

Basic file and folder operations include **Cut**, **Copy**, **Paste** and **Delete**. Press & hold an item to select it while enabling the multi-selection mode, therefore these command buttons will be visible in the Control panel.

- **Select All**

  Tap to open the menu and tap **Select All**.
- **Deselect All**

  Tap to open the menu and tap **Deselect All**.
- **Cancel Selection**

  Tap **Done** to cancel selection.
- **Copy, Cut and Paste**

  Tap **Copy**( ) or **Cut**( ) in the Control panel. After TOSHIBA File Manager exits the multi-selection mode, you can redirect to a folder where to paste the selected items. Tap **Paste** ( ) in the Control panel to complete the operation.
- **Delete**

  Tap **Delete**( ) in the Control panel to delete the item(s) you have selected. Confirm the operation by tapping **OK**.

Grid/List view

You can change how files and folders appear by simply tapping Grid/List view switching icon( ) in the Control panel.

- **Grid view**( )

  By default, files and folders are shown in a gird.
- **List view**( )

  Files and folders are shown in a scrolling list enabling you to view detailed information about an item.

Creating a folder

You can create a folder by following below steps:

1. Navigate to the directory where to create a new folder.
2. Tap in the Control panel.
3. A dialog will appear, enter the folder name and tap **OK**.

Renaming a file or a folder

You can rename a file or folder by following the steps below:

1. Press & hold a file or folder you want to rename.
2. Tap icon to open the menu and tap **Rename**.
3. A dialog will appear. Enter a new folder name and tap **OK**.

Sorting files and folders

You can sort and view files and folders by name, time, size and type.

1. Tap in the Control panel.
2. Tap **By name**, **By size**, **By time** or **By type** as you want.

By default, items are arranged in ascending order. Simply tap the option to switch to descending order.

*Only some options are supported in **MUSIC**,**VIDEOS** and **PICTURES** tabs.*

Adding folder shortcut

Folder shortcut makes it faster to access the folder. TOSHIBA File Manager is designed to create folder shortcut in the Device panel.

1. Press & hold a folder to select it, and then tap to open the menu.
2. Tap **Add to shortcut** to add it to the Device panel.

- *The operation is only applicable to folders saved in the internal storage.*
- *To remove a folder shortcut from the Device panel, simply press & hold the shortcut and tap **OK**. However, the storage device icon cannot be removed.*

TOSHIBA TruNote

This application is provided with some models.

You can use **TruNote** application to take and manage the handwritten notes.

To open **TruNote**, tap **All Apps -> TruNote**.

On the main screen of **TruNote**, tap the white area or the menu button ( ) and you will see several buttons appear. Tap **Settings** and select **Help** to view the details about the use of this application.

TruNote can also add the memo button ( ) to the screen. Tapping it allows you to write on the current screen by using the Stylus Pen at any time. Your memo will be saved into **Memo Gallery** in **TruNote**. The position of this button can be changed from the **Settings**of **TruNote** application.

TOSHIBA TruCapture

This software is a camera application with special features to take improved snapshots of whiteboards, printed materials, notebooks, etc.

To open TOSHIBA TruCapture, tap **All Apps -> TruCapture**.

The **Tutorial** providing the information about how to use this feature will appear. You can also find it by tapping the **Menu** (⋮) and selecting **Tutorial** on the main screen of TOSHIBA TruCapture.

Online Manual

Online Manual is an application to launch the pre-installed online manual (this manual) for this tablet.

Chapter 6

Settings

This chapter describes the **Settings** app - a quick and easy access to the global options that allows you to configure how your tablet communicates and functions.

- *A scrollbar is displayed on the right side of the screen. This scrollbar is only used to show the position of the displaying area. You can scroll the screen using your fingers.*
- *Some settings are only available to the tablet owner.*

Wireless & networks

Your tablet can connect to a variety of networks and devices, mobile networks for voice and data transmission, Wi-Fi data networks and Bluetooth devices, such as headsets.

Options under **WIRELESS & NETWORKS**, which are briefly described below, are used to configure and manage these connections. You can tap **More** to get additional hidden options.

Please refer to the following sections in this chapter for more details.

- **Wi-Fi**

  Tap to see available Wi-Fi networks when Wi-Fi is turned on.
- **Bluetooth**

  Tap to see available Bluetooth devices when Bluetooth is turned on.
- **Data usage**

  Tap to monitor your current or historical data usage.
- **Airplane mode**

  Check to enable Airplane mode.

  All wireless communications are disabled when Airplane mode is enabled.
- **VPN**

  Tap to set up and manage Virtual Private Networks (VPNs).

- **Tethering & portable hotspot settings**

  You can share your tablet's mobile data connection with other devices (up to 8) via USB, Bluetooth, or by turning your tablet into a portable Wi-Fi hotspot.

  Tap to adjust these settings.

This function is only supported by 3G models.

- **NFC**

  Some models support NFC (Near Field Communication) which allows you to share data between devices when they touch each other or are brought into close proximity.

- **Mobile networks**

  Tap to set up your wireless service provider's mobile network.

This function is only supported by 3G models.

Wi-Fi networks

Wi-Fi is a wireless networking technology that can provide Internet access at distances of up to 100 meters, depending on the Wi-Fi router and your surroundings.

To use Wi-Fi on your tablet, you need to access a wireless access point, or "hotspot". If access points are opened you can simply connect to them. Others are hidden or implement other security features, so you must configure your tablet so it can connect to them.

There are numerous systems for securing Wi-Fi connections, including some that rely on secure certificates or other schemes to ensure that only authorized users can connect.

Turn off Wi-Fi when you are not using it to extend the life of your battery. The Status bar displays icons that indicate Wi-Fi status.

	Connected to a Wi-Fi network (waves indicate the wireless connection strength)
	Notification that an open Wi-Fi network is in range

Turning Wi-Fi on and connecting to a Wi-Fi network

You can turn on and connect to a Wi-Fi network by following steps:

1. Open the **Settings** app from **All Apps**.
2. Under **WIRELESS & NETWORKS**, tap **Wi-Fi**.

3. Slide the **Wi-Fi** switch to the **ON** position.

   The tablet scans for available Wi-Fi networks and displays the names of those it finds. Secured networks are indicated with a lock icon.

If the tablet finds a network that you connected to previously, it will connect to it automatically.

4. Tap a network name to see more details.

   If the network is open, you are prompted to confirm that you want to connect to that network by tapping **Connect**.

   If the network is secured, you're prompted to enter a password or other credentials. (Ask your network administrator for details.)

   When you have connected to a network, tap on the network name for details about the status, signal strength, link speed, security type and IP address.

Adding a Wi-Fi network

You can add a Wi-Fi network so the tablet will remember it, along with any security credentials, and connect to it automatically when it is in range. You must also add a Wi-Fi network to connect to it, if it does not broadcast its name (SSID), or to add a Wi-Fi network when you are out of range.

To join a secured network, you need to contact the network's administrator to learn what security system is deployed and to obtain the password or other required security credentials.

1. Turn on Wi-Fi if it is not already on.
2. In the Wi-Fi settings screen, tap the plus icon (+).
3. Enter the Network SSID (name). If the network is secured, tap **Security** and then tap the type of security deployed on the network.
4. Enter the required security credentials.
5. Tap **Save**.

   The tablet will connect to the wireless network. Any credentials that you enter will be saved, so you can connect automatically the next time you come within range of this network.

Forgetting a Wi-Fi network

You can make your tablet forget about the details of a Wi-Fi network that you added. For example, if you don't want the tablet to connect to it automatically or if it is a network that you no longer use.

1. Turn on Wi-Fi if it's not already on.
2. In the Wi-Fi settings screen, tap the network name.
3. Tap **Forget** in the dialog that opens.

Modifying a Wi-Fi network

You can modify each connected Wi-Fi network settings including credentials, proxy server settings and IP settings.

Proxy server settings may be required for some internal or external network connection. By default, the Wi-Fi networks you add are not configured to connect via a proxy server, but you can change that for each Wi-Fi network you've added.

Proxy settings are used by Browser and may not be used by other apps.

1. In the Wi-Fi settings screen, press & hold the network name you have added.
2. Tap **Modify network**.
3. Check **Show advanced options.**
4. If the network has no proxy settings, tap **None** and select **Manual**.
5. Enter the required proxy settings you have obtained.
6. Tap **Save**.

A static IP address may also be manually configured for some network. By default, the Wi-Fi networks you add are configured for automatic IP assignment. You can change it for each Wi-Fi network you've added.

1. In the Wi-Fi settings screen, press & hold the network name you have added.
2. Tap **Modify network**.
3. Check **Show advanced options.**
4. If the network has no manual IP settings, tap **DHCP** and select **Static**.
5. Enter the required IP address you have obtained.
6. Tap **Save**.

Advanced Wi-Fi settings

Advanced Wi-Fi settings are available following the steps below.

1. Turn on Wi-Fi if it is not already on.
2. In the Wi-Fi settings screen, tap the **Menu** icon (⋮) and tap **Advanced**.

Several options are described below.

- **Network notifications**

  By default, when Wi-Fi is on, you receive notifications in the Status bar when your tablet detects an open Wi-Fi network. Uncheck this option to turn off notifications.

- **Keep Wi-Fi on during sleep**

  Tap this option to change the setting:

  Always: Stay connected to Wi-Fi always.

  Only when plugged in: Stay connected to Wi-Fi only when the tablet is connected to the AC adaptor.

  Never: never to stay connected to Wi-Fi during sleep.

  When your tablet supports 3G, **Never** option is likely to increase mobile data usage. You may want to revisit this setting if you receive a notification that you're approaching your specified mobile data limit.
- **Wi-Fi optimization**

  Check this option to minimize battery usage when Wi-Fi is turned on.

Wi-Fi Direct

Wi-Fi direct allows you to directly connect to devices nearby via Wi-Fi for much higher-speed wireless communication. You can share files or streaming videos/audios from other compatible devices.

Tap the **Menu** icon (⋮) and tap **Wi-Fi Direct** to enable Wi-Fi direct. Tap **SEARCH FOR DEVICE** to find the nearby available devices whose names will be listed under **PEER DEVICES** for connection.

- *Wi-Fi should be connected before using Wi-Fi direct.*
- *Wi-Fi direct may fail to work when both devices have connected to a different hotspot.*

Bluetooth

Bluetooth is a short-range wireless communications technology that devices can use to exchange information over a distance of about 8 meters. The most common Bluetooth devices are headphones for listening to the music and other portable devices, including cell phones.

This tablet does not support Bluetooth connections via ad-hoc network.

To connect to a Bluetooth device, you must turn on your tablet's Bluetooth radio. The first time you use a new Bluetooth device, you must "pair" it with your tablet so that they connect securely to each other. After that, you can simply connect to a paired device.

Turn off Bluetooth when you're not using it, to extend the life of your battery between charges. You may also be required to turn Bluetooth off in some locations. Bluetooth is turned off in Airplane mode.

Status bar icons indicate Bluetooth status.

Turning Bluetooth on or off

1. Open the **Settings** app from **All Apps**.
2. Under **WIRELESS & NETWORKS**, tap **Bluetooth**.
3. Slide the **Bluetooth** switch to the **ON** position to turn on the Bluetooth and slide left to switch **OFF** .

Changing your tablet's Bluetooth name

Your tablet has a generic Bluetooth name by default, which is visible to other devices when your connect them. You can change the name so that it is more recognizable.

1. Open the **Settings** app from **All Apps**.
2. Make sure that the Bluetooth is turned on.
3. In the Bluetooth settings screen, Tap the **Menu** icon (⋮) and tap **Rename tablet**.
4. Enter a new name for your tablet.
5. Tap **Rename** to complete the operation.

Pairing your tablet with a Bluetooth device

You must pair your tablet with another device before you can connect to it. Once you pair your tablet with another device, they stay paired unless you unpair them.

1. Open the **Settings** app from **All Apps**.
2. Make sure that the Bluetooth is turned on.

   Your tablet will scan for and display the names of all available Bluetooth devices in range.

   If the device you want to pair with is not included in the list, make it discoverable. See the documentation that came with your device to learn how to make it discoverable by your tablet, and for other instructions for pairing.
3. If your tablet stops scanning before you make the other device discoverable, tap **SEARCH FOR DEVICES**.
4. Tap on the name of the Bluetooth device in the list to pair it.

   The devices pair with each other. If you're prompted to enter a passkey, try entering 0000 or 1234 (the most common default passkeys), or consult the documentation that came with the device to learn its passkey. If the pairing is successful, that means your tablet is connected to the device.

Connecting to a Bluetooth device

Once paired, you can connect to a Bluetooth device. For example, to switch between devices or to reconnect after your tablet and this device come back into range.

1. Open the **Settings** app from **All Apps**.
2. Make sure that the Bluetooth is turned on.

3. In the list of Bluetooth devices, tap a paired but unconnected device. If the device you expected isn't displayed, tap **SEARCH FOR DEVICES**.

   When your tablet and this device are connected, this device is shown as connected in the **Paired Devices** list.

Configuring a Bluetooth device

Some Bluetooth devices have multiple profiles. Profiles can include the ability to transmit your conversations, play music in stereo, or transfer files or other data. You can select profiles you want to use with your tablet. You can also change the name of the Bluetooth device as it appears on your tablet.

1. Make sure that the Bluetooth is turned on.
2. Tap the Quick Settings icon ( ) beside a paired Bluetooth device.

   A screen opens that allows you change the device profile or unpair it.

Mobile networks

This section only applies to models with 3G modules.

When you assemble your tablet with a SIM card from your wireless service provider, your tablet is configured to use your provider's mobile networks for transmitting data.

Your tablet is configured to work with many mobile carriers' networks. If your tablet does not connect to a network when you insert a SIM card and turn it on, contact your carrier to obtain & confirm Access Point Name (APN) details.

Disabling data when roaming

1. Open the **Settings** app from **All Apps**.
2. Under Wireless and networks, tap **More -> Mobile networks**, and uncheck **Data roaming**. However you can still transmit data via a Wi-Fi connection.

Editing or creating a new access point

If you and your wireless service provider determine that you need to change the settings of your current APN or to create a new one, you must obtain the APN and detailed settings from your provider.

1. Open the **Settings** app from **All Apps**.
2. Under Wireless and networks, Tap **More -> Mobile networks -> Access Point Names**.
3. Tap an existing APN to edit it, or tap the Menu icon ( ) and select **New APN** to create a new one.

   Enter the APN settings that you obtained from your wireless service provider by tapping each setting that you need to edit.

4. When you finished, tap **Save**.

   If you have created a new APN, tap it in the APNs screen to start using it.

Data usage

Data usage refers to the amount of data uploaded or downloaded by your tablet during a given period. Additional fees may be charged when the data usage exceeds the limit depending on your wireless service provider's plan.

Data usage settings allow you to:

- View data usage by apps
- Enable or disable app auto-sync data
- Enable or disable app data transfer in the background for mobile hotspots

It is suggested that you check your wireless service provider's plan and determine what data usage limit may apply before adjusting the data usage settings.

The information displayed on the data usage settings screen is measured by your tablet. Your wireless service provider's data usage accounting may differ. Steep overage charge is possible in excess of your wireless service provider's data limits.

Data usage can help you to view and track data usage but it is not guaranteed to prevent additional charges.

Setting data usage

Data usage of Wi-Fi is illustrated.

Tap **Data usage cycle** to choose a different cycle. This date range is the period for which data usage is displayed in the graph below.

The vertical white lines on the graph show a period of time within the data usage cycle. You can drag the lines to change the period which determines the total data usage amount below the graph.

Managing data usage by app

Some apps transfer data in the background and managing background data usage for individual apps can sometimes be a useful way to reduce your overall data usage (however, this may also affect the app's performance or cause it to malfunction). Check whether data usage can be managed from the app's own settings before manaing it here.

Device

Options under **DEVICE** allow you to fine tune your tablet hardware.

Sound

Your tablet uses sounds to communicate with you. You can configure and customize any of those including notifications, ringtones, alarms and feedback on your navigations.

Sound contains the following options:

- **Volumes**

  Tap to open a dialog where you can drag a slider to set the volume separately for music, video, games, multimedia, notifications and alarms.
- **System**
  - **Default notification**

    Tap to open a dialog where you can set the default notification tone when you receive a notification.
  - **Touch sounds**

    Check this option to play sound when tapping the screen.
  - **Screen lock sounds**

    Check this option to play sound when locking and unlocking the screen.

Display

You can use **Display** settings to configure the brightness and other screen settings.

Display contains the following options:

- **Brightness**

  Tap to open a dialog and drag the slider left or right to adjust the screen brightness.

  Check **Automatic brightness** to disable manual brightness control.

  Check **Power Save** to enable power saving.
- **Wallpaper**

  Tap to select a wallpaper source and change wallpaper.
- **Sleep**

  Tap to open a dialog where you can set the time of inactivity before the tablet goes to sleep.

- **Daydream**

  Slide the **Daydream** switch to the **ON** position. You can choose one of the following options shown on the screen when the tablet is in sleep mode.

  - **Clock**

    Tap to select the **Clock** to show on the screen. You can change the clock style or check the **Night mode** option by tapping Quick settings icon ( ).
  - **Colors**

    Show changing colors on the screen.
  - **Photo Frame**

    Presents a slideshow of photos on your tablet. Tap Quick settings icon ( ) to open a screen where you can select which photos to be displayed.
  - **Photo Table**

    Scatters photos on your tablet across your screen. Press & hold a photo to move it around the screen or swipe it away to hide it. Tap Quick settings icon ( ) to open a screen where you can select which photos to be displayed.

  When you have selected an option, you can tap **START NOW** on the top of the screen to start **DAYDREAM** immediately.
- **Font size**

  Tap to open a dialog where you can select the font size on the user interface.

Some apps may not display texts properly if font size which is set as Normal by default is changed.

- **External Display**

  Two options are provided for adjusting the external display from the tablet.

  3D output: Check this option to make 3D output functional when displaying video on an external display.

  3D depth: Tap to open a dialog where you can drag a slider to adjust the 3D depth for external display.

Camera

You can use **Camera** settings to configure the still images captured by the tablet's back camera.

This setting contains the following options:

- **Image stabilization**

  Check this option to reduce noise and camera shake when capturing still images.

- **Detail enhancement**

  Tap to open a dialog where you can select the detail enhancement level.
- **Color enhancement**

  Check this option to apply color correction based on color association.

- *The functions are disabled according to application configuration even they are enabled in **Camera** settings.*
- ***Image stabilization** is automatically disabled in bright conditions.*
- *Even **Image stabilization** is checked, it is possible that blur and/or noise may still remain according to conditions.*

Video enhancement

Slide the switch to the **ON** position to enable **Video enhancement** powered by Toshiba Technologies.

- *Some contents, devices and applications may not be supported by the video enhancement function.*
- *Battery life may be affected by the configuration of the video enhancement function.*

Detailed settings are available only after video enhancement is enabled.

- **High quality video**

  Check this option to select the high quality video.
- **Video demo mode**

  This option is available after **High quality video** is checked.

  Check this option to enable video enhancement preview - half of the video playback area is enabled while the other is not.

Audio enhancement

Slide the switch to the **ON** position to enable **Audio enhancement** powered by Toshiba and DTS Technologies.

- *Some contents, devices and applications may not be supported by the audio enhancement function.*
- *Battery life may be affected by the configuration of the audio enhancement function.*

Detailed settings are available only after audio enhancement is enabled.

You will find the following options under **Microphone** setting:

- **Toshiba Noise Suppressor**

  Toshiba Noise Suppressor is voice enhancement solution that provides a clear voice experience of recording and communication apps in noisy environments. The solution suppresses stationary environment noise.

Toshiba Noise Suppressor *may reduce the voice volume. Change this setting to either* ***Low*** *or* ***Off*** *if the volume is reduced too much.*

- **Toshiba Beamforming**

  Toshiba Beamforming is voice enhancement solution that provides a clear voice experience of recording and communication apps in noisy environments. The solution suppresses audio from crosswise direction.

Toshiba Beamforming *may reduce the volume. Uncheck this option if the volume is reduced too much.*

DTS Premium Voice Pro information

DTS Premium Voice Pro is a multimedia + voice enhancement solution that provides a remarkably expansive sound experience, complete with deep, rich bass, and crystal clear dialog. The solution also addresses and compensates for the challenges noisy environments pose to communication to deliver a soothing, rich and natural tonal quality that can be clearly heard and understood anytime, anywhere.

U.S. patents apply to this product. See http://patents.dts.com. Manufactured under license from DTS Licensing Limited.

dts Premium Voice Pro

Storage

Storage shows your internal storage and external storage status.

Internal storage

Internal storage contains the following options:

- **Total Space**

  Shows the total memory space of internal storage in your tablet.
- **Available**

  Shows the free space of internal storage.

The following options will be displayed under the current user:

- **Apps**

  The amount of application data of internal storage.

- **Pictures, Videos**

  The amount of picture and video data of internal storage.
- **Audio (music, ringtones, podcasts etc.)**

  The amount of audio data of internal storage.
- **Downloads**

  The amount of downloaded data of internal storage.
- **Cached data**

  The amount of cached data for all apps of internal storage.
- **Misc.**

  The amount of miscellaneous data of internal storage.

You can also find the total storage amount of other users.

SD card

SD card contains the following options after you insert an SD card.

- **Unmount SD card**

  Tap to unmount the SD card for safe removal.

Unmounting is not possible if the tablet is connected to a computer as a removable MTP (Media Transfer Protocol). Disconnect the tablet from computer before unmounting.

USB storage

USB storage contains the following options depending on the devices that you have inserted:

- **Unmount USB0 - Unmount USB7**

  Tap to unmount the USB memory device for safe removal.

Unmounting is not possible if the tablet is connected to a computer as a removable MTP (Media Transfer Protocol). Disconnect the tablet from computer before unmounting.

USB computer connection

You can choose how the USB port works by tapping the Menu icon (⋮) and select **USB computer connection.** Please refer to the *Connecting to a computer* section for more details.

Battery

Battery allows you to check what is using the battery and the battery usage data.

Tap to open a list of the applications and operating system components you have used since you last connected the tablet to a power source, sorted by the amount of power they have used.

- **System Performance**

  Tap to open a dialog where you can select **Maximum Performance** or **Balanced** for power consumption.

Maximum Performance *may make the tablet warmer than* ***Balanced****.*

Tap **REFRESH** on the top of the screen to reload the list.

Power Management

You can use the **Power management** to change the settings of the following items that affect power consumption: **Keep Wi-Fi on during sleep**, **Wi-Fi optimization**, **Sleep**, **Brightness**, **System Performance** and **High quality video**.

You can change the settings under three tabs.

- **Default**

  The default settings are displayed. Tap **Apply** to change to such settings.
- **Power save**

  The settings for power saving are displayed. Tap **Apply** to change to such settings.
- **Custom**

  The settings that user can customize are displayed. Tap on each profile item to open a dialogue which displays a list of options. When the desired option is selected, the updated value will immediately show on the Custom screen.

  Tap **Capture**, the present setting values are imported into the list.

  Tap **Apply**, your custom settings are applied.

In some cases, some options may not immediately affect the power consumption right after the settings are applied.

Apps

You can use the **Apps** settings to view details about the applications installed on your tablet, to manage their data and force them to stop.

Swipe between the three tabs at the top of the screen, each displaying a list of apps or their components.

- **Downloaded**

  Tap to open a list of all downloaded applications installed on your tablet, along with their size. They are sorted by name alphabetically by default.

- **Running**

  Tap to open a list of all applications, services (applications or parts of applications that provide services to other applications or that run even when their main application isn't running), processes that are currently running and how much memory they are using. Depending on the service, when you tap it in the list it will either open a dialog where you can stop it or open its Settings screen.
- **All**

  Tap to open a list of all applications that you downloaded and all applications that are pre-installed with your tablet.

You can tap the Menu icon (⋮) and select **Sort by size** to switch the order of the lists in **Downloaded** or **All** tabs.

- *This tablet does not support another Operating System.*
- *TOSHIBA cannot guarantee or support applications that are installed by a user.*

Users

You can share your tablet with family and friends. Each new user you set up here can use a separate space on the tablet with its own Home screen, account, apps, settings and so on.

You can create additional users on the tablet.

Each user's image appears on the lock screen along with the tablet owner's image. To use the tablet, touch your image and unlock your own lock screen.

- *Any user can accept the updated app permissions on behalf of any other users.*
- *Only the tablet's owner can remove any user's space completely or uninstall any user's apps.*
- *The way **Settings** work varies when the tablet has multiple users. For example, some options like **More -> VPN** under **Settings** are visible only to the owner and affect all users.*
- *The performance and response of the tablet may slow down when background users are running applications.*
- *New users cannot be created when the storage space is not enough in the tablet.*

Add a user

To add a user, you must be the owner.

Tap the **ADD USER** on the top right of the user's screen. A dialog will appear, tap **OK** to continue:

- If the person is available, tap **Set up now** and ask the person to set up the Google account and other settings.
- If the person is not available, tap **Not now**. A new user appears in the list.

  When you can hand over the tablet to the person for setup, tap the user image in **Device -> Users** under **Settings** app, or on the lock screen.

Modify user information

Each user can modify his/her own image and information shown on the lock screen:

- **Change image:** tap the user name.
- **Change nickname:** tap **Nickname**.
- **Add or change additional text:** tap **User info**.

Delete a user

- The tablet's owner can delete any user's space by tapping the Trash icon ( ) beside the user's name.
- Other users can only delete their own space by tapping Menu icon ( ) on the top right of the screen and select **Delect from this device**.

Switch users

Each user's image and nickname appear on the lock screen along with the tablet owner's. To enter your own space, tap your image and unlock the screen with your screen lock.

Alternatively, swipe down from the top right of any screen to open Quick Settings panel, and then tap your image near the top left. This returns you to the lock screen, from which each user can unlock his/her own space.

Personal

Options under **PERSONAL** allow you to manage personal accounts, data backup and security.

Location access

You can use **Location access** settings to configure location related settings.

Location access contains the following options:

- **Location access**

  Slide the **Access to my location** switch to the **ON** position to allow the apps that have asked your permission to use your location information.

- **Location sources**
  - **GPS satellites**

    Check this option to find your location via GPS satellites.
  - **Wi-Fi & mobile network location**

    Check this option to let your apps use Google's location service to estimate your location faster.

Security

You can use **Security** settings to configure settings that help secure your tablet and its data.

Security contains the following options:

- **Screen Security**
  - **Screen lock**

    Tap to open a screen where you can configure the tablet to lock screen with a **Slide**, **Face Unlock**, **Pattern**, **PIN**, **Password** or **Bluetooth PXP Device Unlock**. You can also choose **None** to disable screen lock. However, when multiple users are setup, this option become unavailable.

- *Bluetooth PXP Device Unlock is supported for some models.*
- *Prerequisites to setup **Bluetooth PXP Device Unlock:***
  1. *Bluetooth should be ON.*
  2. *A paired Bluetooth device with PXP support.*

     When the prerequisites are not met, please check the above two points and try again.
- *Bluetooth PXP Device Unlock is less secure than a pattern, PIN, or password.*
- *Please refer to Chapter 10, Information for Wireless Devices for more information on Bluetooth function.*

  - **Owner info**

    Tap to open a dialog where you can enter text to display on the lock screen.
- **Encryption**
  - **Encrypt tablet**

    Tap to open a dialog where you can set numeric PIN or password to decrypt your tablet each time you power it on.

*A PIN or password must be set (using **Screen lock** option) before encrypting your tablet.*

- **SIM Card Lock**
  - **Set up SIM card lock**

    Tap to open a screen where you can configure the tablet to require entering the SIM PIN to use the tablet and where you can change the SIM PIN.

This function is only supported by 3G models.

- **Passwords**
  - **Make passwords visible**

    Check this option to show each password character as you enter them, so that you can see what you enter.
- **Device Administration**
  - **Device administrators**

    Tap to open a screen where you can view and manage device administrators.
  - **Unknown sources**

    Check this option to permit installation of applications that are not downloaded from or available on the Google Play™ Store app.
  - **Verify apps**

    Check this option to disallow or warn before installation of applications that coud be harmful to your tablet.
- **Credential Storage**
  - **Trusted credentials**

    Tap to open a screen where you can allow applications to access your tablet's encrypted store of secure certificates and related passwords and other credentials. You can use credential storage to establish some kinds of Wi-Fi connections. If you have not set a password for credential storage, this setting is grayed.
  - **Install from storage**

    Tap to install a secure certificate from the storage.
  - **Clear credentials**

    Tap to delete all secure certificates and related credentials and erases the secure storage's own password, after prompting you to confirm that you want to do this.

Language & input

You can use **Language & input** settings to select the language for the text, voice input and voice output on your tablet and for configuring the onscreen keyboard, including words that you've added to its dictionary.

- **Language**

  Tap to select the system language from a list.

- **Spell checker**

  Tap to enable automatic spell check to fix misspelled words more easily.

  Tap the Quick settings icon ( ) besides the option to select the target language.
- **Personal dictionary**

  Tap to open your personal dictionary. To add your words, tap **ADD** on the top right of the screen.
- **Keyboard & Input Methods**
  - **Default**

    Tap to open a dialog where you can select the default input method you want to use, if you have more than one installed, tap **Set up input methods** to open the screen where you can configure each input method.
  - **Stylus Mobile**

    Check this option to select handwriting as the input method. Tap the Quick Settings icon ( ) to open a screen where you can configure settings for this input method.

    You can switch the input method between handwriting and keyboard by the following steps:

    1. Tap any text box, the keyboard selection icon ( ) will appear in the notification icons area.

    2. Press & hold the notification icons area till a flashing line appears, and then swipe down the flashing line to open notifications panel.

    3. Tap **Choose input method** to open a dialog where you can select handwriting or keyboard as your input method.
- **Physical Keyboard**

  When a physical keyboard is connected, settings will be available. Tap on the name of the connected keyboard to configure the keyboard layout.
- **Speech**
  - **Voice Search**

    Tap to open a screen where you can set the voice recognition function.
  - **Text-to-speech output**

    Tap to open a screen where you can set the text-to-speech engine required for text-to-speech function.
- **Mouse/Trackpad**
  - **Pointer speed**

    Tap to configure the mouse pointer speed by dragging the slider left or right.

Stylus Pen

Stylus Pen allows you to manage the settings for your Stylus pen by the following options:

- **Personalization**

  Check this option to enable **Personalization** feature. Then tap **Personalization** to open a screen where you can configure the alignment between the stylus pen and the display point.
- **Hovering pointer**

  Check to make the hovering printer display when the pen point is near the screen.

This option is shown only for the models provided with the Stylus pen.

Backup & reset

You can use the **Backup & reset** settings to manage your personal data.

This option is shown only when the current user of tablet is Owner.

- **Backup & Restore**
  - **Back up my data**

    Check this option to back up application data, Wi-Fi passwords, and other settings to Google servers.
  - **Backup account**

    Tap to display the Google account that your settings and other data are backed up with.
  - **Automatic restore**

    Check this option to restore backup settings or other data when you reinstall an application.
- **Personal Data**
  - **Factory data reset**

    Tap to erase all user data in the internal storage. Follow the on-screen instructions to reset it. Please note that data in the removable media won't be erased. Please refer to the section *Factory Reset* in "Basic" chapter for details.

Accounts

You can tap an account to edit account settings which may vary with different account type.

Add account

You can add a mail account or an exchange account and sync your contacts, calendar or other applications data via an exchange account.

System

Date & time

You can use **Date & time** settings to set your preferences for how dates are displayed. You can also use these settings to set your own time and time zone, rather than obtaining the current time from the mobile network.

- **Automatic date & time**

  Uncheck this option to set the date & time on the tablet manually rather than obtaining the current time from the network.
- **NTP server**

  Setup an NTP server address and the interval for automatic date & time synchronization.
- **Automatic time zone**

  Uncheck this option to set the time zone on your tablet manually rather than obtaining the local time zone from the network.

This function is only supported by 3G models.

- **Set date**

  If **Automatic date & time** is unchecked, tapping it will open a dialog where you can manually set the date.

The system date cannot be set beyond Jan/18/2038.

- **Set time**

  Tap to open a dialog where you can manually set the time.
- **Select time zone**

  Tap to open a dialog where you can set the time zone.
- **Use 24-hour format**

  Check this option to display the time using 24-hour time format - for example, 13:00 rather than 1:00 pm.
- **Choose date format**

  Tap to open a dialog where you can select the format for displaying dates.

Accessibility

You can use **Accessibility** settings to enable accessibility functions, such as reading or enlarging text on the screen.

- **TalkBack**

  Slide the switch to the **ON** position to enable TalkBack which provides spoken feedback to help blind and low-vision users.

- **Magnification gestures**

  Slide the switch to the **ON** position to turn on this feature. Then you can temporarily magnify what's on your screen or use magnification mode to easily zoom and pan your screen. This feature is developed to help the low-vision users.

  Temporarily magnify: Triple-tap & hold

  Magnify & pan: Triple-tap & hold, then drag your finger.

  Toggle magnification mode in or out: Triple tap & release, or enter or exit an application to get out of magnification mode.

  When you are in magnification mode, you can:

  Pan: Drag two or more fingers across the screen.

  Adjust zoom level: Pinch or expand using two or more fingers.

Triple-tap for magnification works everywhere except for the keyboard and navigation buttons.

- **Large text**

  Check to increase the default font size used across the system for better readability.

- **Auto-rotate screen**

  Check to make automatic screen rotation available as you turn your tablet sideways.

- **Speak passwords**

  Check to enable this function that allows the tablet to speak the passwords while you are typing.

- **Accessibility shortcut**

  Slide the switch to the **ON** position to turn on this feature, which allows you to touch your tablet's screen and hear what's under your finger via spoken feedback. This feature is helpful to blind users.

  When this feature is turned on, you can quickly enable accessibility features by the following steps:

  1. Press and hold the power button until you hear a sound or feel a vibration.

  2. Touch and hold two fingers until you hear audio confirmation.

If the tablet has multiple users, use this shortcut on the lock screen temporarily enables accessibility until the tablet is unlocked.

- **Text-to-speech output**

  Tap to select and set up speech engine that converts text into spoken voice.

- **Touch & hold delay**

  Tap to select the delay required for your tablet to notice that you are pressing and holding an item.
- **Enhance web accessibility**

  Tap to allow apps to install scripts from Google.

About tablet

About tablet includes information about your tablet.

- **System updates**

  Tap to open the screen to check your system for update.
- **Status**

  Tap to open the Status screen with a long list of information about your battery, mobile network connection and other details.
- **System information**

  Tap to open a screen that displays some basic information of your tablet, such as Manufacture, Product name, Product version and Serial number, etc.
- **Legal information**

  Tap to open a screen where you can obtain legal information about the softwares included with your tablet.
- **Model number**

  Display the model number of your tablet.
- **Android™ version**

  Display the current version of Android installed on your tablet.
- **Baseband version**

  Display the baseband version.

This function is only supported by 3G models.

- **Kernel version**

  Display the kernel version.
- **Build number**

  Display the build number.

Chapter 7

Optional Accessories

Optional devices can expand the tablet's capability and its versatility. This section describes the connection or installation of the following devices:

Cards

- Memory media slot
  - Secure Digital™ (SD) Card (microSD/SDHC/SDXC card)
- SIM card

Peripheral devices

- USB device
- HDMI device
- Toshiba Keyboard Cover

Memory media slot

The tablet is equipped with a Memory media slot that can accommodate some kinds of memory media with various memory capacities so that you can easily transfer data from devices, such as digital cameras and Personal Digital Assistants.

- *This Memory media slot supports the following memory media:*
  - *Secure Digital (SD) Card (microSD/SDHC/SDXC Card).*
- *Please note that not all memory media have been tested and verified to work correctly. Therefore, it is not possible to guarantee that all memory media will operate properly.*

Memory media

This section provides the important safety precautions in order to handle your memory media.

Points to note about microSD/SDHC/SDXC memory cards

microSD/SDHC/SDXC memory cards comply with SDMI (Secure Digital Music Initiative), which is a technology adopted to prevent unlawful copy or playback of digital music. For this reason, you cannot copy or playback protected material on other device, and you may not reproduce any copyrighted material except for your personal enjoyment.

The supported maximum capacity of memory card is 64GB.

Memory media format

New media cards are formatted according to specific standards. If you wish to reformat a media card, be sure to do so with a device that uses media cards.

Formatting microSD/SDHC/SDXC memory cards

microSD/SDHC/SDXC memory cards are sold already formatted in conformity to specific standards. If you reformat an microSD/SDHC/SDXC memory card, be sure to reformat it with a device such as digital camera or digital audio player that uses microSD/SDHC/SDXC memory cards, not with the format command provided within Windows.

Should you need to format all areas of the memory card, including the protected area, you will need to obtain an appropriate application that applies the copy protection system.

Media care

Observe the following precautions when handling the card.

- Do not twist or bend cards.
- Do not expose cards to liquids or store in humid areas or lay media close to containers of liquid.
- Do not touch the metal part of a card or expose it to liquids or let it get dirty.
- After using card, return it to its case.
- The card is designed so that it can be inserted only one way. Do not try to force the card into the slot.
- Do not leave a card partially inserted in the slot. Press the card until you hear it click into place.
- Set the write-protect switch to the lock position, if you do not want to record data.
- Memory cards have a limited lifespan, so it is important to backup important data.
- Do not write to a card if the battery power is low. Low power could affect writing accuracy.
- Do not remove a card while read/write is in progress.

For more details on using memory cards, see manuals accompanying the cards.

Inserting a memory media

The following instructions apply to all types of supported media devices. Please follow the steps described below to insert a memory media card:

1. Turn the memory media so that the contacts (metal areas) are facing up.
2. Insert the memory media into the memory media slot on the tablet.
3. Push the memory media gently until you hear a click.

Figure 7-1 Inserting a memory media

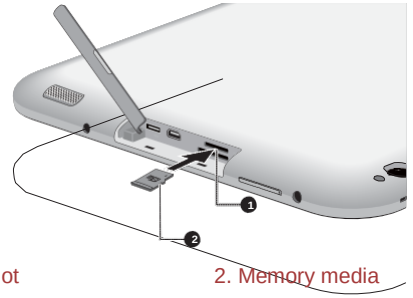

1. Memory media slot 2. Memory media

- *Make sure memory media is oriented properly before you insert it. If you insert the media in wrong direction, you may not be able to remove it.*
- *When inserting memory media, do not touch the metal contacts. You could expose the storage area to static electricity, which can destroy data.*
- *Do not turn the tablet off nor switch to Sleep Mode while files are being copied - doing so may cause data loss*

Removing a memory media

The following instructions apply to all types of supported media devices. To remove a memory media, follow the steps as detailed below:

1. Make sure all file operations are finished.
2. Tap **All Apps -> Settings -> Storage -> Unmount SD card**.
3. Push the memory media until you hear a click to partially release it.
4. Grasp it and pull it out of the slot.

Do not remove the memory media while the tablet is in Sleep mode. The tablet could become unstable or data in the memory media could be lost.

SIM card slot

Some models are equipped with a SIM card slot that allows you to assemble a SIM card from your wireless service provider to use your provider’s mobile networks for transmitting data.

This section only applies to models with 3G modules.

Inserting a SIM card

This section explains how to insert a SIM card:

Do not carry out the following operations when the tablet is powered on, otherwise the SIM card may be damaged.

1. Turn the SIM card so that the contacts (metal areas) are facing down.
2. Remove the slot cover and insert the SIM card into the SIM card slot on the tablet and push it until you hear a click.

Figure 7-2 Inserting a SIM card

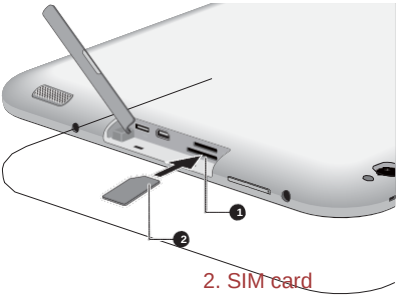

1. SIM card slot 2. SIM card

Now you can power on your tablet to use your provider's mobile networks.

Please always keep a minimum of 1.5cm distance away from the antennas area during operation.

Removing a SIM card

To remove a SIM card, follow the steps as detailed below:

Do not carry out the following operations when the tablet is powered on, otherwise the SIM card may be damaged. Damage may also happen to the tablet.

1. Remove the slot cover and push the SIM card until you hear a click to partially release it.
2. Grasp it and pull it out of the slot.

USB device

This tablet is equipped with a Micro USB port supporting USB host function. This allows you to connect the following USB devices to the

tablet: USB flash drives, USB HDDs (only FAT file system), USB Hubs powered by an AC adapter, game controllers and other USB accessories for Android-powered devices. This port complies with USB 2.0 standard.

Support of HIDs (Keyboards and Mouse) connection will only be available by the latest software. Please upgrade the software to the latest version after your purchase of the tablet.

To connect a USB device, you must purchase a Micro A plug - A receptacle cable. This item is available from your reseller or TOSHIBA dealer.

Make sure the connector is properly aligned with the socket. Do not try to force the connection, doing so can damage the connecting pins.

- *This tablet does not support a printer.*
- *As the port operation of all USB devices has not been confirmed, some USB devices may not function properly.*

HDMI device

The tablet is equipped with a Micro HDMI port that can send video by connecting with external devices. Your tablet supports 1080p and 720p signal formats. The available **format** depends on the HDMI device that you are connected to.

To connect external devices, follow the steps as detailed below:

As the port operation of all HDMI (High-Definition Multimedia Interface) display devices have not been confirmed, some HDMI display devices may not function properly.

1. Plug Type D connector of the HDMI cable into the Micro HDMI port on your tablet.
2. Plug the other end of the HDMI cable into the HDMI port of the HDMI device.

Figure 7-3 Connecting an HDMI cable

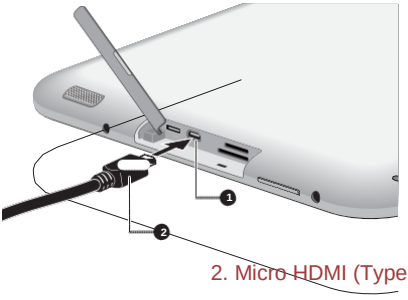

1. Micro HDMI port
2. Micro HDMI (Type D) connector

- *Please do not plug/unplug an HDMI device when the tablet is in Sleep Mode.*
- *When you connect a television or external monitor to the HDMI port, make sure the display output device is set to HDMI.*
- *When you unplug the HDMI cable and re-plug it, please wait at least 5 seconds before you re-plug the HDMI cable.*

TOSHIBA Keyboard Cover

TOSHIBA Keyboard Cover is provided with some models.

TOSHIBA Keyboard Cover provides Bluetooth keyboard with powerful features and great convenience when using your tablet.

Grand tour

The following figure shows an overview of TOSHIBA Keyboard Cover.

Figure 7-4 Grand tour

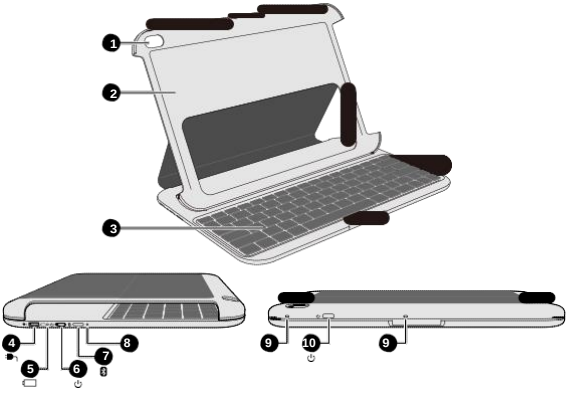

1. Hole for tablet back camera
2. Holder
3. Keyboard
4. Micro USB port
5. Battery indicator
6. Power switch (keyboard)
7. Connect button
8. Bluetooth indicator
9. Holes for tablet Microphones
10. Power button (for tablet)

Keyboard indicators

The Keyboard Cover has two indicatiors indicating the battery and bluetooth status respectively.

Icon	Item	Function
	Battery indicator	■ Full charged: Glows white ■ Charging: Glows amber ■ Low battery: Blinks amber
	Bluetooth indicator	■ Power on: Glows blue for three seconds and then off ■ Searching: Blinks blue until pairing is finished

Setting up the Keyboard Cover

Fit your tablet into the Keyboard Cover properly. The Power button on the tablet may be touched when you put in or take out your tablet. The Keyboard Cover supports three modes when using your tablet as the following figure shows:

Figure 7-5 Use modes

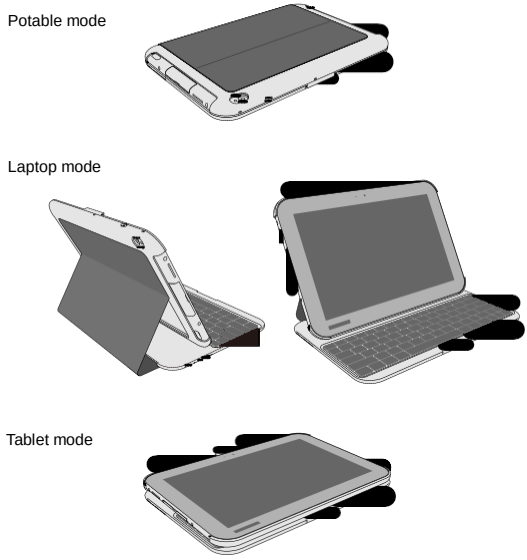

Charging the Keyboard Cover

Before using the Keyboard Cover, it is recommended that you charge the battery.

One micro USB to micro USB cable is bundled with the Keyboard Cover for charging.

Please follow the steps as detailed below to charge the Keyboard Cover:

1. Plug one end of the bundled micro USB to micro USB cable into the micro USB port on your tablet.
2. Plug the other end of the bundled micro USB to micro USB cable into the micro USB port on the keyboard.

A full charge takes about 2.5 hours.

Figure 7-6 Charging the Keyboard Cover

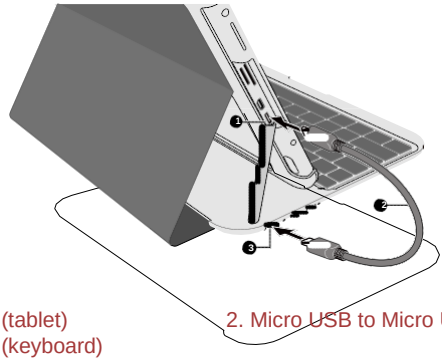

1. Micro USB port (tablet)
2. Micro USB to Micro USB cable
3. Micro USB port (keyboard)

- *If your tablet power is low, connect the AC adaptor to your tablet while charging. Both your tablet and the Keyboard Cover can be charged at the same time.*
- *If you are not going to use the Keyboard for a long period of time, turn it off to conserve power.*

Connecting your tablet to the Keyboard Cover

Before you start using the Keyboard Cover, it is neccessary to do Bluetooth pairing.This is required for the first time and after that, the system will remember this keyboard until manually unpaired.

You may follow the steps as detailed below to do the pairing:

1. On the Keyboard Cover, slide the Power switch left to turn it on. The Bluetooth indicator on the Keyboard Cover will glow blue for approximately three seconds.
2. Press the Connect button on the Keyboard Cover for approximately three seconds, the Bluetooth indicator will blink blue for pairing.
3. On your tablet, open the Bluetooth settings by tapping **All Apps -> Settings -> Wireless & Networks -> Bluetooth**. Slide the **Bluetooth** switch to the **ON** position and then tap **SEARCH FOR DEVICES**. Your tablet will start scanning available Bluetooth devices.

4. Tap the device named **Toshiba Keyboard Cover**, a Bluetooth pairing request window will pop up. Follow the on-screen instructions to complete pairing. You will see **Toshiba Keyboard Cover** is listed under **Paired devices** after the pairing has been successfully completed.

Now the Keyboard Cover is ready for use.

- *If you want to pair more than one Toshiba Keyboard Cover with your tablet, it is recommended to do pairing one by one.*
- *One tablet only support one Toshiba Keyboard Cover in Bluetooth connecting. Please use only one device for connecting selection.*
- *To manually disconnect the Keyboard Cover, tap **Toshiba Keyboard Cover** under **Paired devices** and tap **OK**.*

Configuring the Keboard layout

Before using Keyboard Cover, you can set up the Keyboard layouts by tapping on the name of the Keyboard Cover listed in **Physical Keyboard** under **Language & input** of **Settings** app.

Reconnecting the Keyboard Cover

Under any of the following conditions, the connection between your tablet and the Keyboard Cover will be lost.

- Bluetooth is turned off on your tablet.
- Keyboard Cover is manually disconnected from tablet settings.
- Keyboard Cover is manually unpaired from tablet settings
- Tablet is powered off.
- Keyboard Cover is powered off.
- Keyboard Cover is in idle mode for 10 minutes.

Generally the Keyboard Cover will automatically search the tablet and complete the re-connection by pressing any key. However, if it is not the case, you can try to turn off and on the keyboard cover and/or turn off and on the tablet's bluetooth. If you are still not able to get reconnected, you may need to manually re-connect the keyboard.

Unpairing the Keyboard Cover

If you will not use the Keyboard Cover for a long time or no longer need it, you may unpair it from your tablet by the following steps:

1. On your tablet, tap **All Apps -> Settings -> Wireless & Networks -> Bluetooth**.
2. Tap the quick settings icon ( ) beside **Toshiba Keyboard Cover** under **Paired devices** to open the device settings menu.
3. Tap **Unpair** to remove the Keyboard Cover.

Function keys

The Keyboard Cover provides function keys enabling you to operate your tablet from the Keyboard.

Some function keys are not provided depending on the model you purchased.

Icons	Function
	Returns to the previous screen.
	Returns to the Home screen.
	Displays recently launched application(s).
	Launches Browser application.
	Returns to the previous page.
	Advances to the next page.
	Plays the previous track on media player.
	Controls the Play/Pause functions on media player.
	Plays the next track on media player.

The media player control keys may not work on some media players.

Icons	Function
	Turns the sound on or off.
	Decreases the volume.
	Increases the volume.
	Decreases tablet display screen brightness.
	Increases tablet display screen brightness.

*If **Automatic Brightness** function is enabled, the display screen brightness decrease/increase function keys will not work.*

Icons	Function
	Allows you to open Settings screen.
	Locks your tablet.
	Allows search function in the current application.
	Allows you to search by voice.
	Opens the Option menu in the current application.
	Launches Email application.
	Shows/hides Software keyboard.

Some applications may not recognize shows/hides Software keyboard function key.

Optional TOSHIBA Accessories

You can add a number of options and accessories in order to make your tablet even more powerful and convenient to use. For reference, the following list details some of the items that are available from your reseller or TOSHIBA dealer:

AC Adaptor	If you frequently use your tablet at more than one site, it may be convenient to purchase an additional AC adaptor to be kept at each site.
Stylus Pen	Stylus Pen can be purchased from your TOSHIBA dealer for use as spare items (spare pen tips and a tip draw-out tool are included).
TOSHIBA Keyboard Cover	TOSHIBA provides a specially designed keyboard cover for your tablet in case you want to work with your tablet via a Bluetooth keyboard.

Not all the accessories are available in your region. Please contact your reseller or TOSHIBA dealer for more information.

Chapter 8

Troubleshooting

TOSHIBA have designed this tablet for durability, however, if problems occur you are able to use the procedures detailed in this chapter to help determine the cause.

All users should become familiar with this chapter as knowing what might go wrong can help prevent problems from occurring in the first place.

Problem solving process

Resolving problems will be much easier if you observe the following guidelines:

- Stop immediately when you recognize a problem exists as taking further action may result in data loss or damage, or you may destroy valuable problem related information that can help solve the problem.
- Observe what is happening - write down what the system is doing and what actions you performed immediately before the problem occurred. Make a screenshot of the current display.

Please also be aware that the questions and procedures described in this chapter are meant only as a guide, they are not definitive problem solving techniques. In reality many problems can be solved simply, but a few may require help from TOSHIBA Support - if you find you need to consult others, be prepared to describe the problem in as much detail as possible.

Preliminary checklist

You should always consider the simplest solution first - the items detailed in this checklist shall provide easy fixes for issues which appear to be serious problems.

- Make sure you turn on all peripheral devices before you turn on the tablet.
- Before you attach an external device you should first turn the tablet off, then when you turn the tablet back on again it will recognize the new device.
- Make sure all optional accessories are configured properly in the tablet's setup program and that all required driver software has been loaded (please refer to the documentation included with the optional accessories for further information on its installation and configuration).
- Check all cables to ensure they are correctly and firmly attached to the tablet - loose cables can cause signal errors.

- Inspect all connecting cables for loose wires and all connectors for loose pins.

Always try to make detailed notes of your observations and keep them in a permanent error log - this will help you to describe your problems to TOSHIBA Support. In addition, if a problem recurs, the log you have made will help to identify the problem faster.

Hardware and system checklist

This section discusses problems caused by your tablet's hardware or attached peripherals. Basic problems may occur in the following areas:

- Internal display panel
- Memory Media Card
- Wireless LAN
- Sound system
- USB device
- Bluetooth

Internal display panel

Apparent tablet's display panel problems may be related to the tablet's setup and configuration.

Problem	Procedure
Problems above remain unresolved or other problems occur	You should initially refer to the documentation supplied to you with the software to understand the cause of the problems. If you are still unable to resolve the problem, contact your reseller, dealer or service provider.

Memory Card

Problem	Procedure
Memory media card error occurs	Unmount memory media card by tapping **All Apps -> Settings -> Device -> Storage** and then insert memory media card once again. If the problem exist, remove the memory media card from the tablet and then reinsert it in order to ensure it is firmly connected. If the problem persists, then you should refer to the documentation supplied with your memory media card for further information.

Problem	Procedure
You cannot read a file	Check to ensure the required file is actually on the memory media card that is inserted into the tablet. If you are still unable to resolve the problem, contact TOSHIBA Support.

USB device

In addition to the information in this section, please also refer to the documentation supplied with your USB device.

Problem	Procedure
USB device does not work	Remove the USB device from the convert cable and reconnect it to ensure it is firmly attached.

Sound system

In addition to the information in this section, please also refer to the documentation supplied with your audio device.

Problem	Procedure
No sound is heard	Adjust the volume. Check the software volume settings. Check to see if system sound is muted. Check to make sure the headphone connection is secure.
Recorded sound volume is low	Disable Toshiba Noise Suppressor setting. Disable Toshiba Beamforming setting.
Recorded sound quality is not good	Disable Toshiba Noise Suppressor setting. Disable Toshiba Beamforming setting.
Recorded sound is not stereo	Check the application supports stereo recording. Disable Toshiba Beamforming setting.

Wireless LAN

If the following procedures do not restore LAN access, consult your LAN administrator.

Problem	Procedure
Cannot access Wireless LAN	Make sure the tablet's Wireless communication function is on. If problems persist, contact your LAN administrator.

Bluetooth

Problem	Procedure
Cannot access Bluetooth device	Check to ensure the tablet's Bluetooth functionality is set to on in **All Apps -> Settings -> Wireless & networks -> Bluetooth**.

TOSHIBA Support

If you require any additional help using your tablet or if you are having problems operating the tablet, you may need to contact TOSHIBA for additional technical assistance.

Before you call

Some problems you experience may be related to software or the operating system so it is important that you investigate other sources of assistance first. Before contacting TOSHIBA, try the following:

- Review troubleshooting sections in the documentation supplied with your software and/or peripheral devices.
- If a problem occurs when you are running software applications, consult the software documentation for troubleshooting suggestions and consider calling the software company's technical support department for assistance.
- Consult the reseller or dealer from where you purchased your tablet and/or software - they are your best resource for current information and support.

TOSHIBA technical support

If you are still unable to solve the problem and suspect that it is hardware related, visit TOSHIBA technical support website http://www.toshiba.co.jp/worldwide/.

Chapter 9

Specifications

This chapter summarizes the tablet's technical specifications.

Physical Dimensions

Size	Approximately 261 (w) x 179 (d) x 10.5 (h) millimeters (not including parts that extend beyond the main body).

Environmental Requirements

Conditions	Ambient temperature	Relative humidity
Operating	5°C (41°F) to 35°C (95°F)	20% to 90% (noncondensing)
Non-operating	-20°C (-4°F) to 60°C (140°F)	10% to 95% (noncondensing)
Wet-bulb temperature	29°C maximum	

Conditions	Altitude (from sea level)
Operating	0 to 6,561 feet (2,000 meters)
Non-operating	0 to 40,000 feet (12,192 meters)

Power Requirements

AC adaptor	100-240V AC 50 or 60 Hz (cycles per second)
Tablet	12V DC

Chapter 10

Information for Wireless Devices

Wireless Technology Interoperability

The Wireless LAN is compatible with other LAN systems Direct Sequence Spread Spectrum (DSSS) /Orthogonal Frequency Division Multiplexing (OFDM) radio technology, and is compliant to:

- The IEEE 802.11 Standard on Wireless LANs (Revision a/b/g/n, b/g/n or ac/a/b/g/n), as defined and approved by the Institute of Electrical and Electronics Engineers.
- The Wireless Fidelity (Wi-Fi®) certification as defined by the Wi-Fi Alliance®.

TOSHIBA does not guarantee compatibility of this device with all equipment using Bluetooth wireless technology.

This device is designed to be interoperable with any product with Bluetooth wireless technology that is based on Frequency Hopping Spread Spectrum (FHSS) radio technology, and is compliant to:

- Bluetooth Specification (depending on the model you purchased), as defined and approved by the Bluetooth Special Interest Group.
- Logo certification with Bluetooth wireless technology as defined by the Bluetooth Special interest Group.

The effective range of the Bluetooth device with PXP support may vary depending on the device and the surrounding radio characteristics.

CAUTION about Wireless Devices

The wireless devices have not completed verification of connection and operation with all devices which are using the Wireless LAN or Bluetooth radio technology.

Bluetooth and Wireless LAN devices operate within the same radio frequency range and may interfere with one another. If you use Bluetooth and Wireless LAN devices simultaneously, you may occasionally experience a less than optimal network performance or even lose your network connection.

If you experience any such problem, immediately turn off either one of your Bluetooth or Wireless LAN.

Please visit http://www.pc.support.global.toshiba.com, if you have any questions about using Wireless LAN or Bluetooth Card from TOSHIBA.

In Europe visit http://www.toshiba-europe.com/computers/tnt/bluetooth.htm

This Bluetooth product is not compatible with devices using Bluetooth Version 1.0B specifications.

Wireless Devices and your health

Wireless products, like other radio devices, emit radio frequency electromagnetic energy. The level of energy emitted by wireless products however is far much less than the electromagnetic energy emitted by wireless devices like for example mobile phones.

Because wireless products operate within the guidelines found in radio frequency safety standards and recommendations, TOSHIBA believes Wireless products is safe for use by consumers. These standards and recommendations reflect the consensus of the scientific community and result from deliberations of panels and committees of scientists who continually review and interpret the extensive research literature.

In some situations or environments, the use of wireless products may be restricted by the proprietor of the building or responsible representatives of the organization. These situations may for example include:

- Using the wireless products on board of airplanes, or
- In any other environment where the risk of interference to other devices or services is perceived or identified as harmful.

If you are uncertain of the policy that applies on the use of wireless devices in a specific organization or environment (e.g. airports), you are encouraged to ask for authorization to use the wireless device prior to turning on the equipment.

Radio Regulatory Information

The wireless device must be installed and used in strict accordance with the manufacturer's instructions as described in the user documentation that comes with the product. This product complies with the following radio frequency and safety standards.

Europe

Restrictions for Use of 2400.0-2483.5MHz Frequencies in Europe

France:	Outdoor use limited to 10mW e.i.r.p. within the band 2454-2483.5MHz	Military Radiolocation use. Refarming of the 2.4GHz band has been ongoing in recent years to allow current relaxed regulation Full implementation planned in 2012.

Italy:	-	For private use, a general authorization is required if WAS/ RLAN's are used outside own premises. For public use, a general authorization is required.
Luxembourg:	Implemented	General authorization required for network and service supply.
Norway:	Implemented	This subsection does not apply for the geographical area within a radius of 20 km from the centre of Ny-Alesund.
Russian Federation:	-	Only for indoor applications.

Restrictions for Use of 5150-5350MHz Frequencies in Europe

Italy:	-	For private use, a general authorization is required if WAS/ RLAN's are used outside own premises.
Luxembourg:	Implemented	General authorization required for network and service supply.
Russian Federation:	Limited	e.i.r.p 100mW. Permitted to use only for indoor applications, closed industrial and warehouse areas, and on board aircraft. 1. Permitted to use for local networks of aircraft crew service communications on board aircraft in area of the airport and at all stages of flight. 2. Permitted to use for public wireless access local networks on board aircraft during a flight at the altitude not less than 3000m.

Restrictions for Use of 5470-5725MHz Frequencies in Europe

Italy:	-	For private use, a general authorization is required if WAS/ RLAN's are used outside own premises.

Luxembourg:	Implemented	General authorization required for network and service supply
Russian Federation:	Limited	e.i.r.p 100mW. Permitted to use only for indoor applications, closed industrial and warehouse areas, and on board aircraft. 1. Permitted to use for local networks of aircraft crew service communications on board aircraft in area of the airport and at all stages of flight. 2. Permitted to use for public wireless access local networks on board aircraft during a flight at the altitude not less than 3000m.

To remain in conformance with European spectrum usage laws for Wireless LAN operation, the above 2.4GHz and 5GHz channel limitations apply for outdoor usage. The user should use the wireless LAN utility to check the current channel of operation. If operation is occurring outside of the allowable frequencies for outdoor use, as listed above, the user must contact the applicable national spectrum regulator to request a license for outdoor operation.

Canada - Industry Canada (IC)

This device complies with RSS 210 of Industry Canada.

Operation is subject to the following two conditions: (1) this device may not cause interference, and (2) this device must accept any interference, including interference that may cause undesired operation of this device.

The term “IC” before the equipment certification number only signifies that the Industry Canada technical specifications were met.

USA-Federal Communications Commission (FCC)

This equipment has been tested and found to comply with the limits for a Class B digital device, pursuant to Part 15 of FCC Rules. These limits are designed to provide reasonable protection against harmful interference in a residential installation.

Refer to the FCC information section for the detailed information.

Caution: Exposure to Radio Frequency Radiation

The radiated output power of the wireless device is far below the FCC radio frequency exposure limits. Nevertheless, the wireless device shall be used

in such a manner that the potential for human contact during normal operation is minimized.

In the usual operating configuration, the distance between the antenna and the user should not be less than 20cm. Please refer to the tablet user's manual for the details regarding antenna location.

The installer of this radio equipment must ensure that the antenna is located or pointed in such a way that it does not emit RF field in excess of Health Canada limits for the general population; consult Safety Code 6, obtainable from Health Canada's website www.hc-sc.gc.ca

Caution: Radio Frequency Interference Requirements

This device is restricted to indoor use due to its operation in the 5.15 to 5.25GHz frequency range.

Taiwan

Article 12	Without permission granted by the NCC, any company, enterprise, or user is not allowed to change frequency, enhance transmitting power or alter original characteristic as well as performance to an approved low power radio frequency devices.
Article 14	The low power radio-frequency devices shall not influence aircraft security and interfere legal communications; If found, the user shall cease operating immediately until no interference is achieved. The said legal communications means radio communications is operated in compliance with the Telecommunications Act. The low power radio-frequency devices must be susceptible with the interference from legal communications or ISM radio wave radiated devices.

Using this equipment in Japan

In Japan, the frequency bandwidth of 2,400MHz to 2,483.5MHz for second generation low-power data communication systems such as this equipment overlaps with that of mobile object identification systems (premises radio station and specified low-power radio station).

1. Important notice

The frequency bandwidth of this equipment may operate within the same range as industrial devices, scientific devices, medical devices, microwave ovens, licensed radio stations and non-licensed specified low-power radio

stations for mobile object identification systems (RFID) used in factory production lines (Other Radio Stations).

1. Before using this equipment, ensure that it does not interfere with any of the equipment listed above.
2. If this equipment causes RF interference to other radio stations, promptly change the frequency being used, change the location of use, or turn off the source of emissions.
3. Contact an authorized TOSHIBA service provider if you have problems with interference caused by this product to Other Radio Stations.

2. Indication for Wireless LAN

The indication shown below appears on this equipment.

1. 2.4 : This equipment uses a frequency of 2.4GHz.
2. DS : This equipment uses DS-SS modulation.
3. OF : This equipment uses OFDM modulation.
4. 4 : The interference range of this equipment is less than 40m.
5. ■■■ : This equipment uses a frequency bandwidth from 2,400MHz to 2,483.5MHz. It is possible to avoid the band of mobile object identification systems.

3. Indication for Bluetooth

The indication shown below appears on this equipment.

1. 2.4 : This equipment uses a frequency of 2.4 GHz.
2. FH : This equipment uses FH-SS modulation.
3. 1 : The interference range of this equipment is less than 10 m.
4. ▭▭▭ : This equipment uses a frequency bandwidth from 2,400 MHz to 2,483.5 MHz. It is impossible to avoid the band of mobile object identification systems.

4. About the JEITA

5GHz Wireless LAN supports W52/W53/W56 Channel.

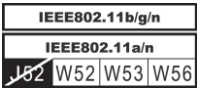

Device Authorization

This device obtains the Technical Regulation Conformity Certification and it belongs to the device class of radio equipment of low-power data communication system radio station stipulated in the Telecommunications Business Law of Japan.

- TOSHIBA AT10LE-A/AT10PE-A

  Japan Approvals Institute for Telecommunications Equipment

  Approval Number: D135025201

The following restrictions apply:

- Do not disassemble or modify the device.
- Do not install the embedded wireless module into other device.

Radio approvals for wireless devices

Approved Countries/Regions

This equipment is approved to the radio standard by the countries/regions in the following table.

Do not use this equipment in the countries/regions which are not listed in the table below.

As of April 2013

Austria	Belgium	Bulgaria	Canada
Cyprus	Czech Rep	Denmark	Estonia
Finland	France	Germany	Greece
Hong Kong	Hungary	Iceland	India
Indonesia	Ireland	Italy	Japan
Korea	Latvia	Liechtenstein	Lithuania
Luxemburg	Malta	Monaco	Netherlands
Norway	Philippines	Poland	Portugal
Romania	Slovak Republic	Slovenia	Spain
Sweden	Switzerland	UK	USA