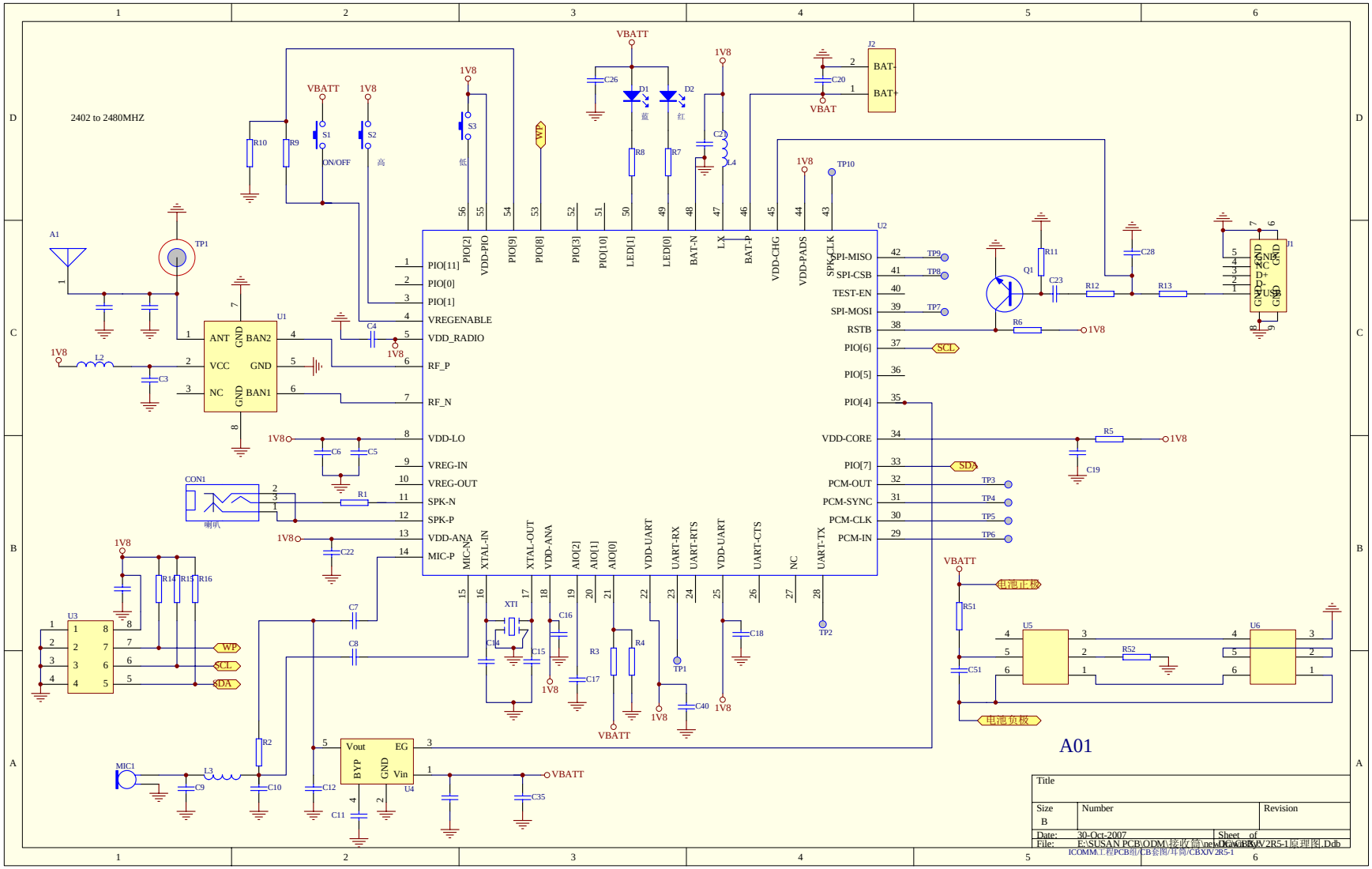
2402 to 2480MHZ
A01
U2
U1
U3
U4
U5
U6
J1
J2
VBATT
1V8
VBAT
BAT-
BAT+
ON/OFF
高
低
蓝
红
WP
SCL
SDA
电池正极
电池负极
PIO[11]
PIO[0]
PIO[1]
VREGENABLE
VDD_RADIO
RF_P
RF_N
VDD-LO
VREG-IN
VREG-OUT
SPK-N
SPK-P
VDD-ANA
MIC-P
MIC-N
XTAL-IN
XTAL-OUT
VDD-ANA
AIO[2]
AIO[1]
AIO[0]
VDD-UART
UART-RX
UART-RTS
VDD-UART
UART-CTS
NC
UART-TX
PIO[2]
VDD-PIO
PIO[9]
PIO[8]
PIO[3]
PIO[10]
LED[1]
LED[0]
BAT-N
LX
BAT-P
VDD-CHG
VDD-PADS
SPK-CLK
SPI-MISO
SPI-CSB
TEST-EN
SPI-MOSI
RSTB
PIO[6]
PIO[5]
PIO[4]
VDD-CORE
PIO[7]
PCM-OUT
PCM-SYNC
PCM-CLK
PCM-IN
ANT
VCC
NC
GND
BAN2
BAN1
Vout
EG
BYP
Vin
喇叭
MIC1
A1
TP1
TP2
TP3
TP4
TP5
TP6
TP7
TP8
TP9
TP10
Title
Size
B
Number
Revision
Date: 30-Oct-2007
Sheet of
File: E:\SUAN PCB\ODM\接收器\new\DG6BXV 2R5-1原理图.Ddb
ICOMM工程PCB组/CB套阁/耳筒/CBXIV 2R5-1