DATE	DOCUMENT CONTROL SECTION
	→

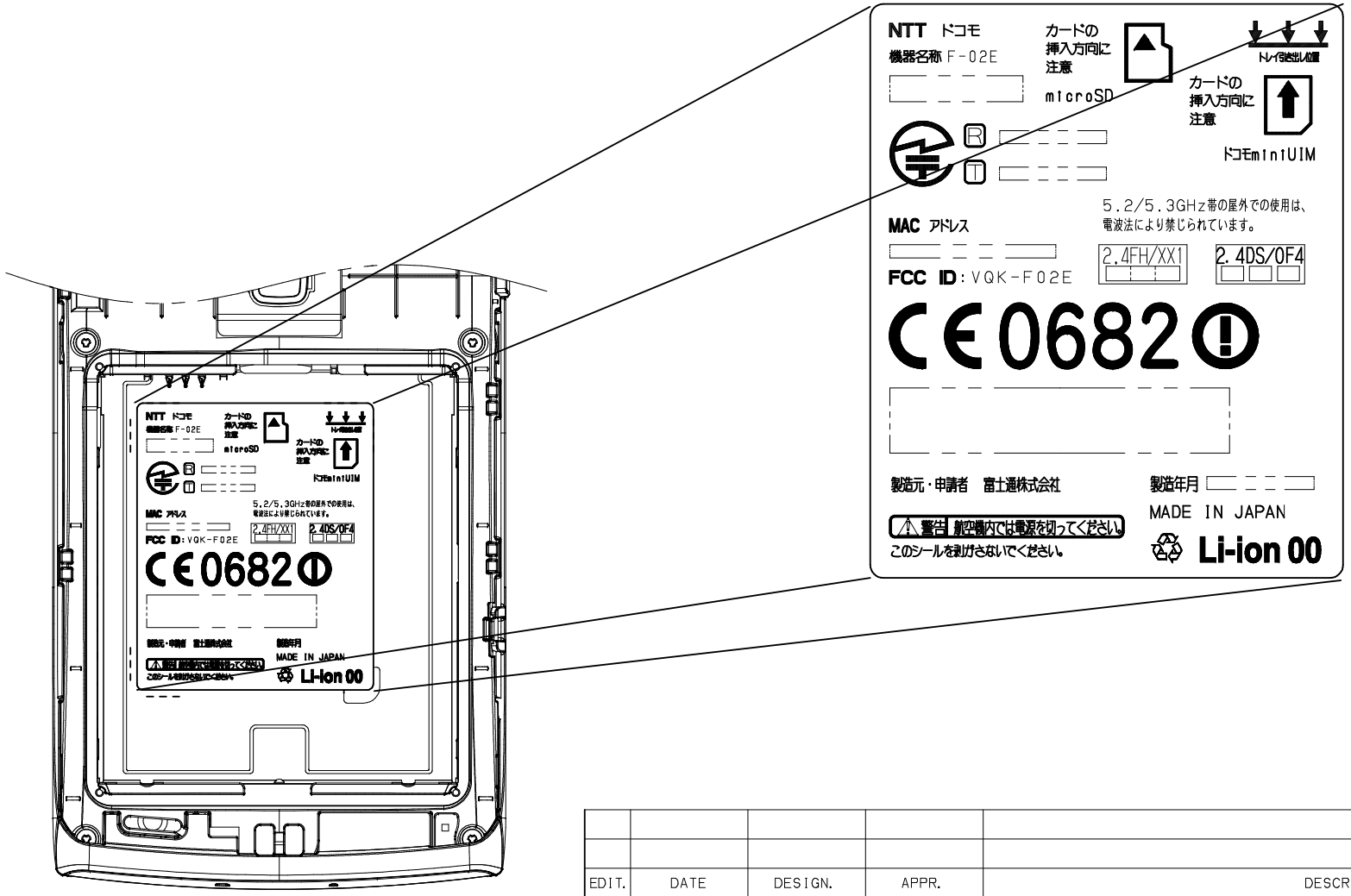

EDIT.	DATE	DESIGN.	APPR.	DESCRIPTION

NOTE

TITLE F-02E LABEL LOCATION

DRAW. NO.

CUST.

SECTION | NRN

DATE	DESIGN.	CHECK	APPR.

FUJITSU LIMITED

SHEET

2006.06 FDZE-4918-1