FCC TEST REPORT

(PART 22)

REPORT NO.: RF110715C25A-2

MODEL NO.: F-01E

FCC ID: VQK-F01E

RECEIVED: Jul. 15, 2011

TESTED: Aug. 19 ~ Aug. 24, 2011(For Sample 1)

Sep. 14, 2012 (For Sample 2)

ISSUED: Sep. 17, 2012

APPLICANT: FUJITSU LIMITED

ADDRESS: 1-1, Kamikodanaka 4-chome, Nakahara-ku, Kawasaki 211-8588, Japan

ISSUED BY: Bureau Veritas Consumer Products Services (H.K.) Ltd., Taoyuan Branch

LAB ADDRESS: No. 47, 14th Ling, Chia Pau Vil., Lin Kou Dist., New Taipei City, Taiwan, R.O.C.

TEST LOCATION: No. 19, Hwa Ya 2nd Rd, Wen Hwa Tsuen, Kwei Shan Hsiang, Taoyuan Hsien 333, Taiwan, R.O.C.

This report should not be used by the client to claim product certification, approval, or endorsement by TAF or any government agencies.

This report is for your exclusive use. Any copying or replication of this report to or for any other person or entity, or use of our name or trademark, is permitted only with our prior written permission. This report sets forth our findings solely with respect to the test samples identified herein. The results set forth in this report are not indicative or representative of the quality or characteristics of the lot from which a test sample was taken or any similar or identical product unless specifically and expressly noted. Our report includes all of the tests requested by you and the results thereof based upon the information that you provided to us. You have 60 days from date of issuance of this report to notify us of any material error or omission caused by our negligence, provided, however, that such notice shall be in writing and shall specifically address the issue you wish to raise. A failure to raise such issue within the prescribed time shall constitute your unqualified acceptance of the completeness of this report, the tests conducted and the correctness of the report contents. Unless specific mention, the uncertainty of measurement has been explicitly taken into account to declare the compliance or non-compliance to the specification.

TABLE OF CONTENTS

RELEASE CONTROL RECORD 4
1 CERTIFICATION 5
2 SUMMARY OF TEST RESULTS 6
2.1 MEASUREMENT UNCERTAINTY 6
3 GENERAL INFORMATION 7
3.1 GENERAL DESCRIPTION OF EUT 7
3.2 DESCRIPTION OF TEST MODES 8
3.2.1 CONFIGURATION OF SYSTEM UNDER TEST 8
3.2.2 TEST MODE APPLICABILITY AND TESTED CHANNEL DETAIL 9
3.3 GENERAL DESCRIPTION OF APPLIED STANDARDS 11
3.4 DESCRIPTION OF SUPPORT UNITS 12
4 TEST TYPES AND RESULTS 13
4.1 OUTPUT POWER MEASUREMENT 13
4.1.1 LIMITS OF OUTPUT POWER MEASUREMENT 13
4.1.2 TEST INSTRUMENTS 14
4.1.3 TEST PROCEDURES 16
4.1.4 TEST SETUP 17
4.1.5 EUT OPERATING CONDITIONS 17
4.1.6 TEST RESULTS 18
4.2 FREQUENCY STABILITY MEASUREMENT 21
4.2.1 LIMITS OF FREQUENCY STABILIITY MEASUREMENT 21
4.2.2 TEST INSTRUMENTS 21
4.2.3 TEST PROCEDURE 22
4.2.4 TEST SETUP 22
4.2.5 TEST RESULTS 23
4.3 OCCUPIED BANDWIDTH MEASUREMENT 24
4.3.1 LIMITS OF OCCUPIED BANDWIDTH MEASUREMENT 24
4.3.2 TEST INSTRUMENTS 24
4.3.3 TEST SETUP 24
4.3.4 TEST PROCEDURES 25
4.3.5 EUT OPERATING CONDITION 25
4.3.6 TEST RESULTS 26
4.4 BAND EDGE MEASUREMENT 29
4.4.1 LIMITS OF BAND EDGE MEASUREMENT 29
4.4.2 TEST INSTRUMENTS 29
4.4.3 TEST SETUP 29
4.4.4 TEST PROCEDURES 30
4.4.5 EUT OPERATING CONDITION 30
4.4.6 TEST RESULTS 31
4.5 CONDUCTED SPURIOUS EMISSIONS 34
4.5.1 LIMITS OF CONDUCTED SPURIOUS EMISSIONS MEASUREMENT 34
4.5.2 TEST INSTRUMENTS 34
4.5.3 TEST PROCEDURE 35
4.5.4 TEST SETUP 35
4.5.5 EUT OPERATING CONDITIONS 35
4.5.6 TEST RESULTS 36
4.6 RADIATED EMISSION MEASUREMENT (BELOW 1GHz) 42
4.6.1 LIMITS OF RADIATED EMISSION MEASUREMENT 42
4.6.2 TEST INSTRUMENTS 42
4.6.3 TEST PROCEDURES 43

4.6.4 DEVIATION FROM TEST STANDARD 43
4.6.5 TEST SETUP.....44
4.6.6 EUT OPERATING CONDITIONS 44
4.6.7 TEST RESULTS 45
5 PHOTOGRAPHS OF THE TEST CONFIGURATION.....66
6 INFORMATION ON THE TESTING LABORATORIES 67
7 APPENDIX A – MODIFICATIONS RECORDERS FOR ENGINEERING CHANGES TO THE EUT BY THE LAB.....68

RELEASE CONTROL RECORD

ISSUE NO.	REASON FOR CHANGE	DATE ISSUED
RF110715C25A-2	Original release	Sep. 17, 2012

1 CERTIFICATION

PRODUCT: Mobile Phone
MODEL: F-01E
BRAND: FOMA
APPLICANT: FUJITSU LIMITED
TESTED: Aug. 19 ~ Aug. 24, 2011(For Sample 1)
Sep. 14, 2012 (For Sample 2)
TEST SAMPLE: ENGINEERING SAMPLE
STANDARDS: FCC Part 22, Subpart H

The above equipment (model: F-01E) has been tested by **Bureau Veritas Consumer Products Services (H.K.) Ltd., Taoyuan Branch,** and found compliance with the requirement of the above standards. The test record, data evaluation & Equipment Under Test (EUT) configurations represented herein are true and accurate accounts of the measurements of the sample's EMC characteristics under the conditions specified in this report.

PREPARED BY : _____ , **DATE:** Sep. 17, 2012
Pettie Chen / Senior Specialist

APPROVED BY : _____ , **DATE:** Sep. 17, 2012
Gary Chang / Technical Manager

2 SUMMARY OF TEST RESULTS

The EUT has been tested according to the following specifications:

APPLIED STANDARD: FCC Part 22 & Part 2			
STANDARD SECTION	**TEST TYPE AND LIMIT**	**RESULT**	**REMARK**
2.1046 22.913 (a)	Effective radiated power	PASS	Meet the requirement of limit.
2.1055 22.355	Frequency Stability	PASS	Meet the requirement of limit.
2.1049	Occupied Bandwidth	PASS	Meet the requirement of limit.
22.917	Band Edge Measurements	PASS	Meet the requirement of limit.
2.1051 22.917	Conducted Spurious Emissions	PASS	Meet the requirement of limit.
2.1053 22.917	Radiated Spurious Emissions	PASS	Meet the requirement of limit. Minimum passing margin is –21.4dB at 4958.4MHz.

2.1 MEASUREMENT UNCERTAINTY

Where relevant, the following measurement uncertainty levels have been estimated for tests performed on the EUT as specified in CISPR 16-4-2:

MEASUREMENT	FREQUENCY	UNCERTAINTY
Conducted emissions	9kHz~30MHz	2.44 dB
Radiated emissions (Sample 1)	30MHz ~ 200MHz	3.34 dB
	200MHz ~1000MHz	3.35 dB
	1GHz ~ 18GHz	2.26 dB
	18GHz ~ 40GHz	1.94 dB
Radiated emissions (Sample 2)	30MHz ~ 200MHz	2.93 dB
	200MHz ~1000MHz	2.95 dB
	1GHz ~ 18GHz	2.26 dB
	18GHz ~ 40GHz	1.94 dB

This uncertainty represents an expanded uncertainty expressed at approximately the 95% confidence level using a coverage factor of k=2.

3 GENERAL INFORMATION

3.1 GENERAL DESCRIPTION OF EUT

EUT	Mobile Phone
MODEL NO.	F-01E
POWER SUPPLY	3.7Vdc (Li-ion battery) 5.4Vdc (Adapter)
MODULATION TYPE	BPSK
FREQUENCY RANGE	826.4MHz ~ 846.6MHz
MAX. ERP POWER	0.1148Watts
WCDMA RELEASE VERSION	6
ANTENNA TYPE	λ/4 Monopole antenna with 0.08dBi gain
DATA CABLE	NA
I/O PORTS	Refer to user's manual
ACCESSORY DEVICES	Battery

NOTE:

1. There are two samples for the EUT. The differences between these two samples are HW versions and GPS function (sample 1 is without GPS function, sample 2 is with GPS function). The difference of two HW versions is the mechanical part of top cover. All tests were fully tested on the sample 1, and sample 2 was verified on the worst condition of sample 1.
2. The EUT use the following Li-ion battery:

BRAND	Fujitsu Limited
MODEL	F19
RATING	3.7Vdc, 830mAh

3. The following accessories are for support units only.

PRODUCT	BRAND	DESCRIPTION
Adapter	SMK	I/P: 100-240Vac, 50-60Hz, 0.12A O/P: 5.4Vdc, 700mA
USB cable	NA	0.8m non-shielded cable without core

4. The following table is for HW and SW.

ITEM	HARDWARE VERSION	SOFTWARE VERSION
Sample 1	V2.2	R17.2
Sample 2	V1.2.0	R08.2

5. The following table is for IMEI code.

ITEM	IMEI code
Sample 1	357261040007608
Sample 2	353705050008116

6. The above EUT information was declared by manufacturer and for more detailed features description, please refer to the manufacturer's specifications or User's Manual.

3.2 DESCRIPTION OF TEST MODES

102 channels are provided to this EUT. Therefore, the low, middle and high channels are chosen for testing.

	CHANNEL	FREQUENCY	TX MODE
LOW	4132	826.4 MHz	WCDMA, HSDPA, HSUPA
MIDDLE	4182	836.4 MHz	WCDMA, HSDPA, HSUPA
HIGH	4233	846.6 MHz	WCDMA, HSDPA, HSUPA

NOTE:

1. Below 1 GHz, the channel 4132, 4182 and 4233 were pre-tested in chamber. The channel 4233 was chosen for final test.
2. Above 1 GHz, the channel 4132, 4182 and 4233 were tested individually.
3. The channel space is 0.2MHz.
4. After pretest of output power and spurious emission under WCDMA-RMC, HSDPA & HSUPA mode, find the worst mode is WCDMA-RMC. Therefore, select WCDMA-RMC mode to do final test

3.2.1 CONFIGURATION OF SYSTEM UNDER TEST

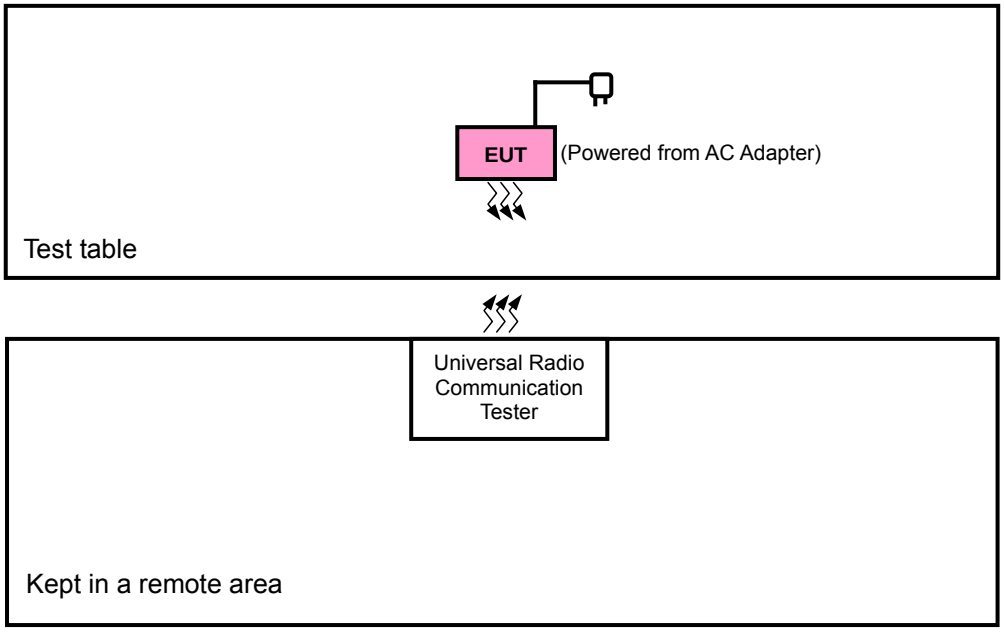

3.2.2 TEST MODE APPLICABILITY AND TESTED CHANNEL DETAIL

EUT CONFIGURE MODE	APPLICABLE TO							DESCRIPTION
	OP	FS	OB	BE	CE	RE<1G	RE≥1G	
A	√	√	√	√	√	√	√	Sample 1
B	√	-	-	-	-	√	√	Sample 2

Where **OP:** Output power **FS:** Frequency stability
OB: Occupied bandwidth **BE:** Band edge
CE: Conducted spurious emissions **RE<1G:** Radiated emission below 1GHz
RE≥1G: Radiated emission above 1GHz **NOTE:** "-"means no effect.

OUTPUT POWER MEASUREMENT:

☒ Pre-Scan has been conducted to determine the worst-case mode from all possible combinations between available modulations, data rates, XYZ axis and antenna ports (if EUT with antenna diversity architecture).
☒ Following channel(s) was (were) selected for the final test as listed below.

EUT CONFIGURE MODE	AVAILABLE CHANNEL	TESTED CHANNEL	MODULATION TECHNOLOGY	AXIS
A	4132 to 4233	4132, 4182, 4233	WCDMA	X, Y, Z
A	4132 to 4233	4233	HSDPA, HSUPA	X, Y, Z
B	4132 to 4233	4132, 4182, 4233	WCDMA	Y

FREQUENCY STABILITY MEASUREMENT:

☒ Pre-Scan has been conducted to determine the worst-case mode from all possible combinations between available modulations and antenna ports (if EUT with antenna diversity architecture).
☒ Following channel(s) was (were) selected for the final test as listed below.

EUT CONFIGURE MODE	AVAILABLE CHANNEL	TESTED CHANNEL	MODULATION TECHNOLOGY
A	4132 to 4233	4233	WCDMA

OCCUPIED BANDWIDTH MEASUREMENT:

☒ This item includes all test value of each mode, but only includes spectrum plot of worst value of each mode.
☒ Pre-Scan has been conducted to determine the worst-case mode from all possible combinations between available modulations and antenna ports (if EUT with antenna diversity architecture).
☒ Following channel(s) was (were) selected for the final test as listed below.

EUT CONFIGURE MODE	AVAILABLE CHANNEL	TESTED CHANNEL	MODULATION TECHNOLOGY
A	4132 to 4233	4132, 4182, 4233	WCDMA, HSDPA, HSUPA

BAND EDGE MEASUREMENT:

☒ Pre-Scan has been conducted to determine the worst-case mode from all possible combinations between available modulations and antenna ports (if EUT with antenna diversity architecture).
☒ Following channel(s) was (were) selected for the final test as listed below.

EUT CONFIGURE MODE	AVAILABLE CHANNEL	TESTED CHANNEL	MODULATION TECHNOLOGY
A	4132 to 4233	4132, 4233	WCDMA, HSDPA, HSUPA

CONDUCTED SPURIOUS EMISSIONS MEASUREMENT:

☒ Pre-Scan has been conducted to determine the worst-case mode from all possible combinations between available modulations and antenna ports (if EUT with antenna diversity architecture).
☒ Following channel(s) was (were) selected for the final test as listed below.

EUT CONFIGURE MODE	AVAILABLE CHANNEL	TESTED CHANNEL	MODULATION TECHNOLOGY
A	4132 to 4233	4132, 4182, 4233	WCDMA

RADIATED EMISSION MEASUREMENT (BELOW 1 GHz):

☒ Pre-Scan has been conducted to determine the worst-case mode from all possible combinations between available modulations, data rates, XYZ axis and antenna ports (if EUT with antenna diversity architecture).
☒ Following channel(s) was (were) selected for the final test as listed below.

EUT CONFIGURE MODE	AVAILABLE CHANNEL	TESTED CHANNEL	MODULATION TECHNOLOGY	AXIS
A	4132 to 4233	4233	WCDMA, HSDPA, HSUPA	X, Y, Z
B	4132 to 4233	4182	WCDMA	Z

RADIATED EMISSION MEASUREMENT (ABOVE 1 GHz):

☒ Pre-Scan has been conducted to determine the worst-case mode from all possible combinations between available modulations, data rates, XYZ axis and antenna ports (if EUT with antenna diversity architecture).
☒ Following channel(s) was (were) selected for the final test as listed below.

EUT CONFIGURE MODE	AVAILABLE CHANNEL	TESTED CHANNEL	MODULATION TECHNOLOGY	AXIS
A	4132 to 4233	4132, 4182, 4233	WCDMA	X, Y, Z
A	4132 to 4233	4233	HSDPA, HSUPA	X, Y, Z
B	4132 to 4233	4182	WCDMA	Z

TEST CONDITION:

APPLICABLE TO	ENVIRONMENTAL CONDITIONS	INPUT POWER	TESTED BY
OP	25deg. C, 65%RH	120Vac, 60Hz	David Huang
FS	25deg. C, 65%RH	120Vac, 60Hz	David Huang
OB	25deg. C, 65%RH	120Vac, 60Hz	David Huang
EM	25deg. C, 65%RH	120Vac, 60Hz	David Huang
BE	25deg. C, 65%RH	120Vac, 60Hz	David Huang
CE	25deg. C, 65%RH	120Vac, 60Hz	David Huang
RE < 1G (Test Mode A)	25deg. C, 65%RH	120Vac, 60Hz	David Huang
RE < 1G (Test Mode B)	25deg. C, 65%RH	120Vac, 60Hz	Kay Wu
RE ≥ 1G (Test Mode A)	25deg. C, 65%RH	120Vac, 60Hz	David Huang
RE ≥ 1G (Test Mode B)	25deg. C, 65%RH	120Vac, 60Hz	Kay Wu

3.3 GENERAL DESCRIPTION OF APPLIED STANDARDS

The EUT is a RF product. According to the specifications of the manufacturer, it must comply with the requirements of the following standards:

FCC 47 CFR Part 2

FCC 47 CFR Part 22

ANSI C63.4-2003

ANSI/TIA/EIA-603-C 2004

NOTE: All test items have been performed and recorded as per the above standards.

3.4 DESCRIPTION OF SUPPORT UNITS

The EUT has been tested as an independent unit together with other necessary accessories or support units. The following support units or accessories were used to form a representative test configuration during the tests.

NO.	PRODUCT	BRAND	MODEL NO.	SERIAL NO.	FCC ID
1	UNIVERSAL RADIO COMMUNICATION TESTER	R&S	CMU200	104484	NA

NO.	SIGNAL CABLE DESCRIPTION OF THE ABOVE SUPPORT UNITS
1	NA

NOTE 1: All power cords of the above support units are non shielded (1.8m).

NOTE 2: Item 1 acted as a communication partners to transfer data.

4 TEST TYPES AND RESULTS

4.1 OUTPUT POWER MEASUREMENT

4.1.1 LIMITS OF OUTPUT POWER MEASUREMENT

The radiated peak output power shall be according to the specific rule Part 22.913 (a) that “Mobile / Portable station are limited to 7 watts e.r.p”.

4.1.2 TEST INSTRUMENTS

Test Mode A

DESCRIPTION & MANUFACTURER	MODEL NO.	SERIAL NO.	DATE OF CALIBRATION	DUE DATE OF CALIBRATION
Test Receiver ROHDE & SCHWARZ	ESIB7	100212	Aug. 02, 2011	Aug. 01, 2012
Spectrum Analyzer ROHDE & SCHWARZ	FSP 40	100041	Jul. 21, 2011	Jul. 20, 2012
BILOG Antenna SCHWARZBECK	VULB9168	9168-160	Apr. 13, 2011	Apr. 12, 2012
HORN Antenna SCHWARZBECK	9120D	9120D-405	Feb. 08, 2011	Feb. 07, 2012
HORN Antenna SCHWARZBECK	BBHA 9170	BBHA9170243	Dec. 27, 2010	Dec. 26, 2011
Preamplifier Agilent	8447D	2944A10633	Nov. 02, 2010	Nov. 01, 2011
Preamplifier Agilent	8449B	3008A01964	Nov. 02, 2010	Nov. 01, 2011
RF signal cable HUBER+SUHNNER	SUCOFLEX 104	295014/4	Sep. 03, 2010	Sep. 02, 2011
RF signal cable HUBER+SUHNNER	SUCOFLEX 104	12738/6	Sep. 03, 2010	Sep. 02, 2011
Software ADT.	ADT_Radiated_ V7.6.15.9.2	NA	NA	NA
Antenna Tower inn-co GmbH	MA 4000	013303	NA	NA
Antenna Tower Controller inn-co GmbH	CO2000	017303	NA	NA
Turn Table ADT.	TT100.	TT93021703	NA	NA
Turn Table Controller ADT.	SC100.	SC93021703	NA	NA

NOTE: 1. The calibration interval of the above test instruments is 12 months and the calibrations are traceable to NML/ROC and NIST/USA.

2. The test was performed in HwaYa Chamber 3.

3. The horn antenna and HP preamplifier (model: 8449B) are used only for the measurement of emission frequency above 1GHz if tested.

4. The FCC Site Registration No. is 988962.

5. The IC Site Registration No. is IC 7450F-3.

Test Mode B

DESCRIPTION & MANUFACTURER	MODEL NO.	SERIAL NO.	DATE OF CALIBRATION	DUE DATE OF CALIBRATION
Test Receiver Agilent	N9038A	MY51210203	Dec. 22, 2011	Dec. 21, 2012
Spectrum Analyzer ROHDE & SCHWARZ	FSU43	101261	Dec. 21, 2011	Dec. 20, 2012
BILOG Antenna SCHWARZBECK	VULB9168	9168-472	Dec. 20, 2011	Dec. 19, 2012
HORN Antenna SCHWARZBECK	BBHA 9120 D	9120D-969	Dec. 20, 2011	Dec. 19, 2012
HORN Antenna SCHWARZBECK	BBHA 9170	9170-480	Dec. 20, 2011	Dec. 19, 2012
Loop Antenna	HFH2-Z2	100070	Jan. 31, 2012	Jan. 30, 2014
Preamplifier EMCI	EMC 012645	980115	Dec. 30, 2011	Dec. 29, 2012
Preamplifier EMCI	EMC 330H	980112	Dec. 30, 2011	Dec. 29, 2012
RF signal cable HUBER+SUHNNER	SUCOFLEX 104	309219/4	Oct. 21, 2011	Oct. 20, 2012
RF signal cable HUBER+SUHNNER	SUCOFLEX 104	250130/4	Jan. 02, 2012	Jan. 01, 2013
RF signal cable Worken	RG-213	NA	Jan. 02, 2012	Jan. 01, 2013
Software	E3 6.120103	NA	NA	NA
Antenna Tower MF	MFA-440H	NA	NA	NA
Turn Table MF	MFT-201SS	NA	NA	NA
Antenna Tower &Turn Table Controller MF	MF-7802	NA	NA	NA

NOTE:
1. The calibration interval of the above test instruments is 12 months and the calibrations are traceable to NML/ROC and NIST/USA.
2. The calibration interval of the loop antenna is 24 months and the calibrations are traceable to NML/ROC and NIST/USA.
3. The test was performed in HwaYa Chamber 9.
4. The horn antenna and HP preamplifier (model: 8449B) are used only for the measurement of emission frequency above 1GHz if tested.
5. The FCC Site Registration No. is 460141.
6. The IC Site Registration No. is IC 7450F-4.

4.1.3 TEST PROCEDURES

EIRP / ERP MEASUREMENT:

a. The power was measured with R&S Spectrum Analyzer. All measurements were done at 3 channels 4132, 4182 and 4233 (low, middle and high operational frequency range.) RWB and VBW is 5MHz.

b. Substitution method is used for E.I.R.P measurement. In the semi-anechoic chamber, EUT placed on the 0.8m height of Turn Table, rotated the table around 360 degrees to search the maximum radiation power and receiver antenna shall be rotated vertical and horizontal polarization and moved height from 1m to 4m to find the maximum polar radiated power. The “Read Value” is the spectrum reading the maximum power value.

c. The substitution horn antenna is substituted for EUT at the same position and signals generator export the CW signal to the substitution antenna via a tx cable . Rotated the Turn Table and moved receiving antenna to find the maximum radiation power. Adjust output power level of S.G to get a Value of spectrum reading equal to “Read Value” of step c. Record the power level of S.G

d. EIRP = Output power level of S.G – TX cable loss + Antenna gain of substitution horn.

e. E.R.P power can be calculated form E.I.R.P power by subtracting the gain of dipole, E.R.P power = E.I.P.R power - 2.15dBi.

CONDUCTED POWER MEASUREMENT:

a. The EUT was set up for the maximum power with WCDMA link data modulation and link up with simulator.
b. Set the EUT to transmit under low, middle and high channel and record the power level shown on simulator.

4.1.4 TEST SETUP

EIRP / ERP MEASUREMENT:

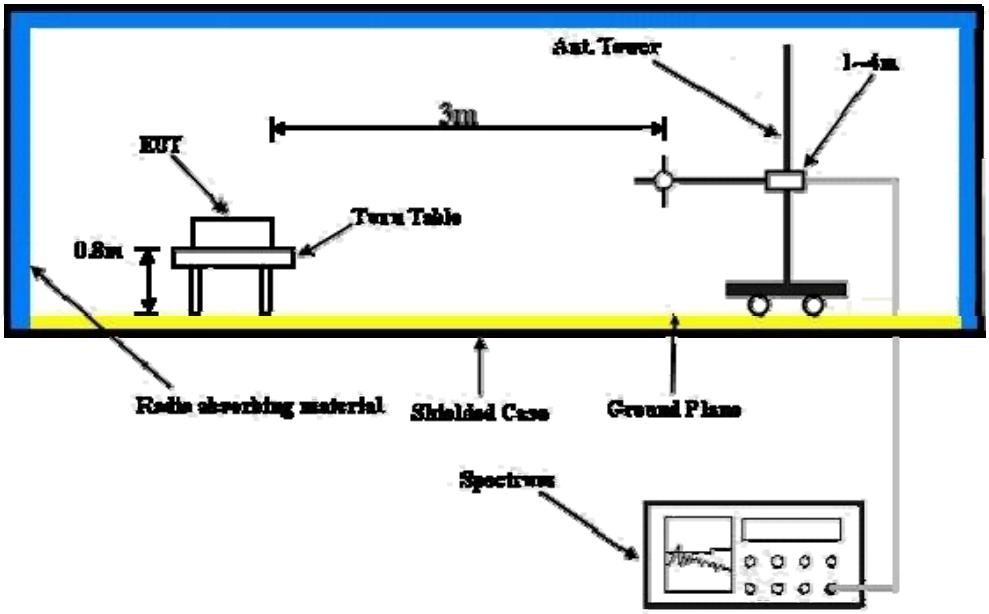

For the actual test configuration, please refer to the attached file (Test Setup Photo).

CONDUCTED POWER MEASUREMENT:

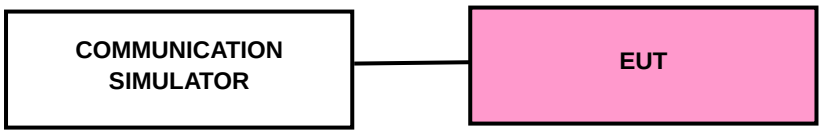

For the actual test configuration, please refer to the attached file (Test Setup Photo).

4.1.5 EUT OPERATING CONDITIONS

a. The EUT makes a call to the communication simulator.

b. The communication simulator station system controlled a EUT to export maximum output power under transmission mode and specific channel frequency.

4.1.6 TEST RESULTS

CONDUCTED OUTPUT POWER (dBm)

CH	FREQ.	WCDMA850		HSDPA	HSUPA
		RMC	AMR		
4132	826.4MHz	23.692	23.932	21.682	23.252
4182	836.4MHz	23.392	23.492	21.232	23.292
4233	846.6MHz	23.392	23.422	21.222	22.982

ERP POWER

Test Mode A

WCDMA-RMC MODE

X-AXIS

CHANNEL NO.	FREQUENCY (MHz)	S.G VALUE (dBm)	CORRECTION FACTOR (dB)	OUTPUT POWER	
				dBm	Watt
4132	826.4	26.8	-8.6	18.2	0.0661
4182	836.4	27.0	-8.6	18.4	0.0692
4233	846.6	27.3	-8.7	18.6	0.0724

Y-AXIS

CHANNEL NO.	FREQUENCY (MHz)	S.G VALUE (dBm)	CORRECTION FACTOR (dB)	OUTPUT POWER	
				dBm	Watt
4132	826.4	26.9	-8.6	18.3	0.0676
4182	836.4	26.7	-8.6	18.1	0.0646
4233	846.6	27.2	-8.7	18.5	0.0708

Z-AXIS

CHANNEL NO.	FREQUENCY (MHz)	S.G VALUE (dBm)	CORRECTION FACTOR (dB)	OUTPUT POWER	
				dBm	Watt
4132	826.4	28.6	-8.6	20.0	0.1000
4182	836.4	29.0	-8.6	20.4	0.1096
4233	846.6	29.3	-8.7	20.6	0.1148

REMARKS: 1. Output Power (dBm) = S.G Value (dBm) + Correction Factor (dB).

2. Correction Factor (dB) = Substitution Antenna Gain (dB) + Cable Loss (dB).

HSDPA MODE

X-AXIS

CHANNEL NO.	FREQUENCY (MHz)	S.G VALUE (dBm)	CORRECTION FACTOR (dB)	OUTPUT POWER	
				dBm	Watt
4233	846.6	25.8	-8.6	17.2	0.0525

Y-AXIS

CHANNEL NO.	FREQUENCY (MHz)	S.G VALUE (dBm)	CORRECTION FACTOR (dB)	OUTPUT POWER	
				dBm	Watt
4233	846.6	25.9	-8.6	17.3	0.0537

Z-AXIS

CHANNEL NO.	FREQUENCY (MHz)	S.G VALUE (dBm)	CORRECTION FACTOR (dB)	OUTPUT POWER	
				dBm	Watt
4233	846.6	28.0	-8.6	19.4	0.0871

REMARKS: 1. Output Power (dBm) = S.G Value (dBm) + Correction Factor (dB).
2. Correction Factor (dB) = Substitution Antenna Gain (dB) + Cable Loss (dB).

HSUPA MODE

X-AXIS

CHANNEL NO.	FREQUENCY (MHz)	S.G VALUE (dBm)	CORRECTION FACTOR (dB)	OUTPUT POWER	
				dBm	Watt
4233	846.6	26.7	-8.6	18.1	0.0646

Y-AXIS

CHANNEL NO.	FREQUENCY (MHz)	S.G VALUE (dBm)	CORRECTION FACTOR (dB)	OUTPUT POWER	
				dBm	Watt
4233	846.6	26.6	-8.6	18.0	0.0631

Z-AXIS

CHANNEL NO.	FREQUENCY (MHz)	S.G VALUE (dBm)	CORRECTION FACTOR (dB)	OUTPUT POWER	
				dBm	Watt
4233	846.6	28.7	-8.6	20.1	0.1023

REMARKS: 1. Output Power (dBm) = S.G Value (dBm) + Correction Factor (dB).
2. Correction Factor (dB) = Substitution Antenna Gain (dB) + Cable Loss (dB).

Test Mode B

WCDMA

Plane	Channel	Frequency (MHz)	LVL (dBm)	Correction Factor(dB)	ERP(dBm)	ERP(mW)	Polarization (H/V)
Y	4132	826.4	-10.09	32.62	20.38	109.14	H
	4182	836.4	-10.26	32.52	20.11	102.57	H
	4233	846.6	-10.29	32.65	20.21	104.95	H
	4132	826.4	-16.99	32.76	13.62	23.01	V
	4182	836.4	-16.76	32.39	13.48	22.28	V
	4233	846.6	-16.92	32.54	13.47	22.23	V

4.2 FREQUENCY STABILITY MEASUREMENT

4.2.1 LIMITS OF FREQUENCY STABILIITY MEASUREMENT

According to the FCC part 22.863 shall be tested the frequency stability. The rule is defined that" The frequency stability shall be sufficient to ensure that the fundamental emission stays within the authorized frequency block." The frequency error rate is according to the JTC standard that the frequency error rate shall be accurate to within 2.5ppm of the received frequency from the base station. The test extreme voltage is according to the 2.1055(d)(1) Vary primary supply voltage from 85 to 115 percent of the nominal value for other than hand carried battery equipment and the extreme temperature rule is comply with the 2.1055(a)(1) –30℃~55℃.

4.2.2 TEST INSTRUMENTS

DESCRIPTION & MANUFACTURER	MODEL NO.	SERIAL NO.	CALIBRATED UNTIL	CALIBRATED UNTIL
Spectrum Analyzer Agilent	E4446A	MY43360128	Feb. 22, 2011	Feb. 21, 2012
Hewlett Packard RF cable	8120-6192	01428251	NA	NA
RF cable	SUCOFLEX 104	257029	Sep. 11, 2010	Sep. 10, 2011
WIT Standard Temperature & Humidity Chamber	MHU-225AU	920842	Jun. 15, 2011	Jun. 14, 2012

NOTE: The calibration interval of the above test instruments is 12 months. And the calibrations are traceable to NML/ROC and NIST/USA.

4.2.3 TEST PROCEDURE

a. Because of the measure the carrier frequency under the condition of the AFC lock, it shall be used the mobile station in the WCDMA link mode. This is accomplished with the use of the JRC NJZ-2000 simulator station. The oven room could control the temperatures and humidity. The link channel is the 4182.

b. Power must be removed when changing from one temperature to another or one voltage to another voltage. Power warm up is at least 15 min and power applied should perform before recording frequency error.

c. EUT is connected the external power supply to control the DC input power. The various Volts from the minimum 3.33Volts to 4.07Volts. Each step shall be record the frequency error rate.

d. The temperature range step is 10 degrees in this test items. All temperature levels shall be hold the ±0.5℃ during the measurement testing.

e. The each temperature step shall be at least 0.5 hours, consider the EUT could be test under the stability condition.

NOTE: The frequency error was recorded frequency error from the communication simulator.

4.2.4 TEST SETUP

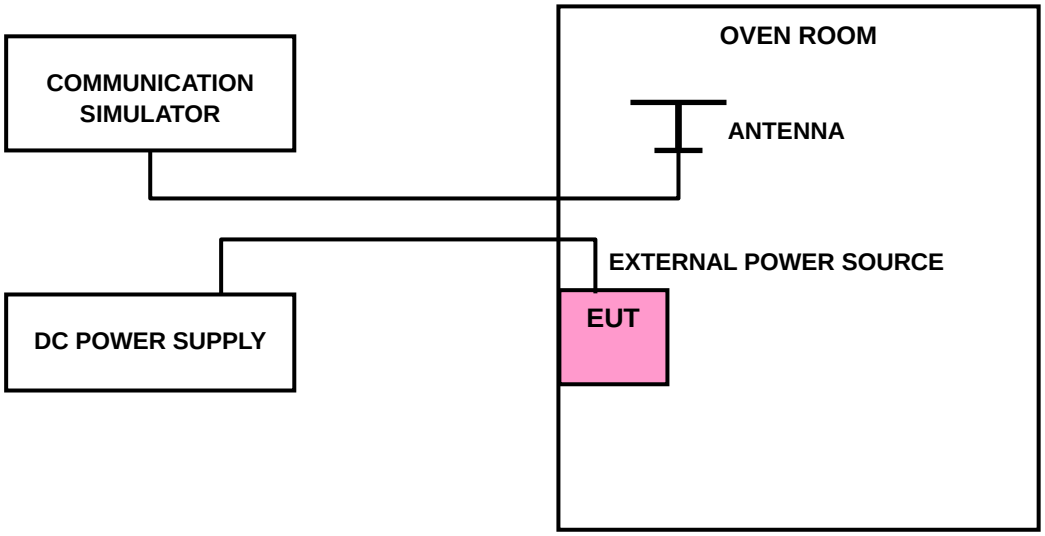

4.2.5 TEST RESULTS

AFC FREQUENCY ERROR vs. VOLTAGE			
VOLTAGE (Volts)	**FREQUENCY ERROR (Hz)**	**FREQUENCY ERROR (ppm)**	**LIMIT (ppm)**
4.07	-5	-0.006	2.5
3.33	-6	-0.007	2.5

NOTE: The applicant defined the normal working voltage of the battery is from 3.33Vdc to 4.07Vdc.

AFC FREQUENCY ERROR vs. TEMP.			
TEMP. (℃)	**FREQUENCY ERROR (Hz)**	**FREQUENCY ERROR (ppm)**	**LIMIT (ppm)**
55	-5	-0.006	2.5
50	-7	-0.008	2.5
40	-6	-0.007	2.5
30	-4	-0.005	2.5
20	-5	-0.006	2.5
10	-7	-0.008	2.5
0	-5	-0.006	2.5
-10	-8	-0.010	2.5
-20	-6	-0.007	2.5
-30	-5	-0.006	2.5

4.3 OCCUPIED BANDWIDTH MEASUREMENT

4.3.1 LIMITS OF OCCUPIED BANDWIDTH MEASUREMENT

The width of a frequency band such that, below the lower and above the upper frequency limits, the mean powers emitted are each equal to a specified percentage 0.5 %of the totalmean power of a given emission.

4.3.2 TEST INSTRUMENTS

DESCRIPTION & MANUFACTURER	MODEL NO.	SERIAL NO.	DATE OF CALIBRATION	DUE DATE OF CALIBRATION
SPECTRUM ANALYZER R&S	FSP40	100039	Jan. 11, 2011	Jan. 10, 2012
Mini-Circuits Power Splitter	ZN2PD-9G	NA	Mar. 24, 2011	Mar. 23, 2012
RF cable	SUCOFLEX 104	274403/4	Jan. 27, 2011	Jan. 26, 2012
RF cable	SUCOFLEX 104	250729/4	Jan. 27, 2011	Jan. 26, 2012
RF cable	SUCOFLEX 104	214377/4	Jan. 27, 2011	Jan. 26, 2012
JFW 20dB attenuation	50HF-020-SMA	NA	NA	NA

NOTE: The calibration interval of the above test instruments is 12 months. And the calibrations are traceable to NML/ROC and NIST/USA.

4.3.3 TEST SETUP

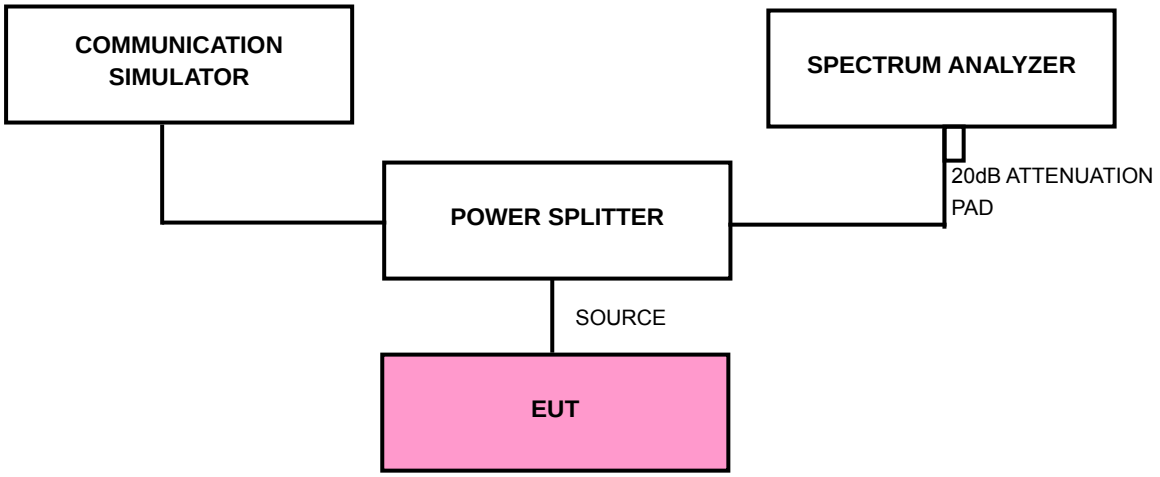

4.3.4 TEST PROCEDURES

a. The EUT makes a call to the communication simulator. The power was measured with R&S Spectrum Analyzer. All measurements were done at 3 channels 4132, 4182 and 4233 (low, middle and high operational frequency range.)

b. The conducted occupied bandwidth used the power splitter via EUT RF power connector between simulation base station and spectrum analyzer.

c. The communication simulator station system controlled a EUT to export maximum output power under transmission mode and specific channel frequency. Use OBW measurement function of Spectrum analyzer to measure 99 % occupied bandwidth.

4.3.5 EUT OPERATING CONDITION

a. The EUT makes a call to the communication simulator.

b. The communication simulator station system controlled a EUT to export maximum and minimum output power under transmission mode and specific channel frequency.

4.3.6 TEST RESULTS

FOR WCDMA:

FOR WCDMA-RMC:

CHANNEL	FREQUENCY (MHz)	99% OCCUPIED BANDWIDTH (MHz)
4132	826.4	4.16
4182	836.4	4.16
4233	846.6	4.18

CH 4233

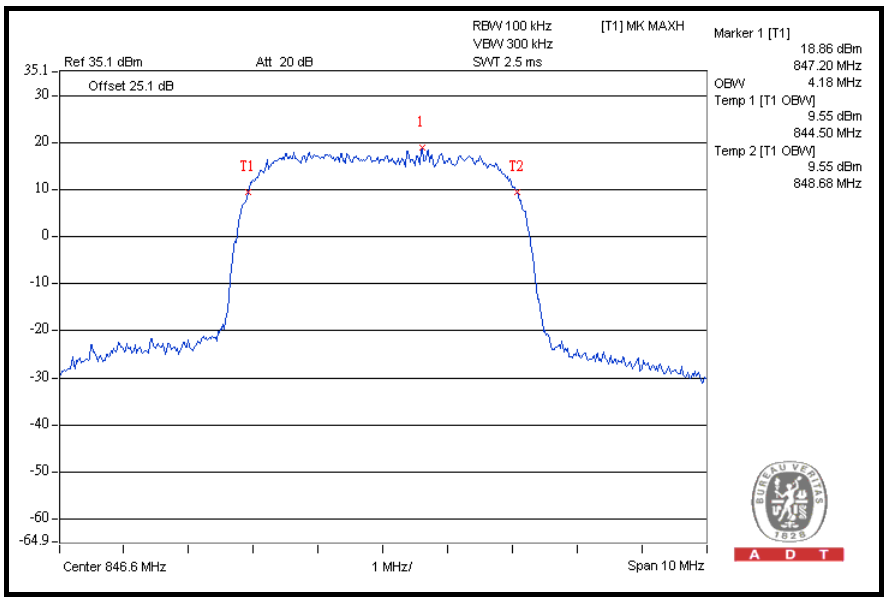

FOR HSDPA:

CHANNEL	FREQUENCY (MHz)	99% OCCUPIED BANDWIDTH (MHz)
4132	826.4	4.14
4182	836.4	4.16
4233	846.6	4.14

CH 4182

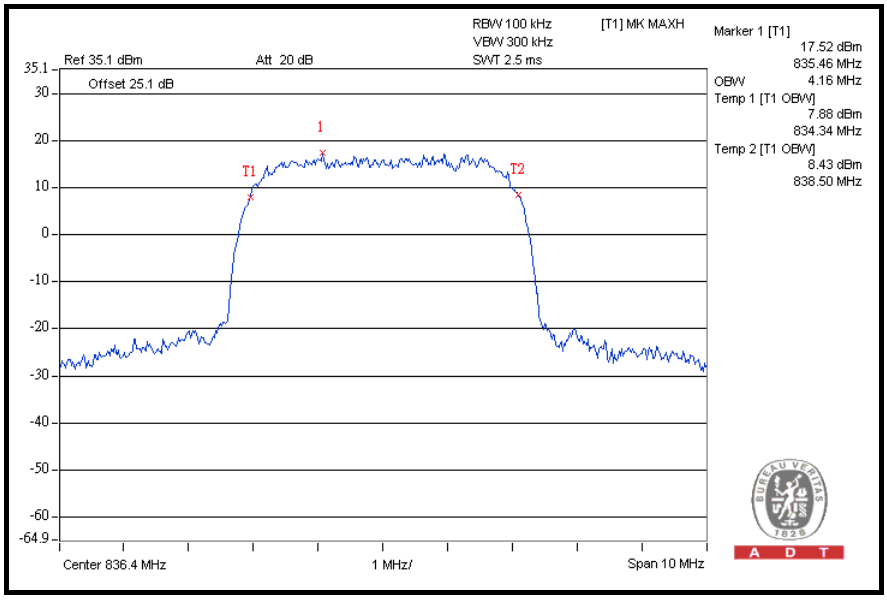

FOR HSUPA:

CHANNEL	FREQUENCY (MHz)	99% OCCUPIED BANDWIDTH (MHz)
4132	826.4	4.16
4182	836.4	4.16
4233	846.6	4.18

CH 4233

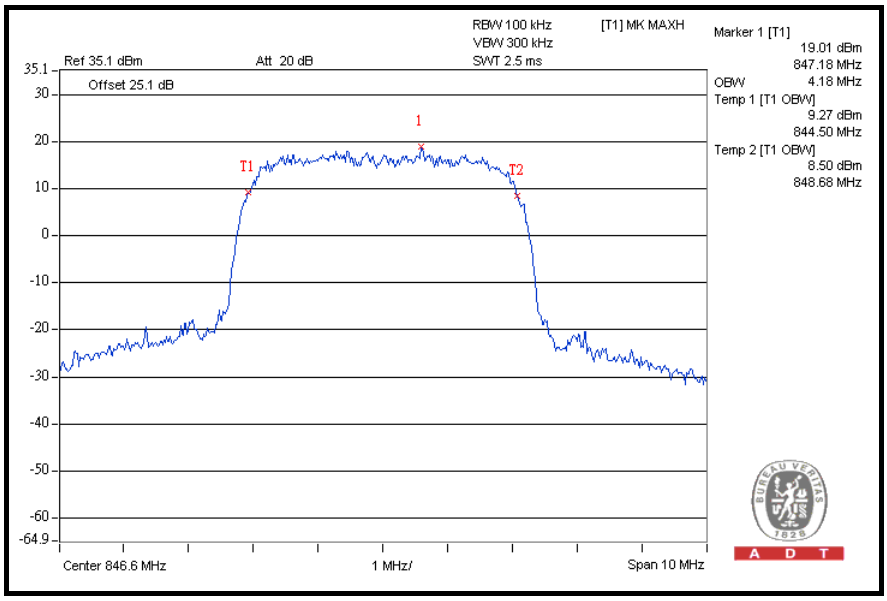

4.4 BAND EDGE MEASUREMENT

4.4.1 LIMITS OF BAND EDGE MEASUREMENT

According to FCC 22.917 specified that power of any emission outside of the authorized operating frequency ranges must be attenuated below the transmitting power (P) by a factor of at least 43 + 10 log(P) dB. In the 1 MHz bands immediately outside and adjacent to the frequency block a resolution bandwidth of at least one percent of the emission bandwidth of the fundamental emission of the transmitter may be employed.

4.4.2 TEST INSTRUMENTS

DESCRIPTION & MANUFACTURER	MODEL NO.	SERIAL NO.	DATE OF CALIBRATION	DUE DATE OF CALIBRATION
SPECTRUM ANALYZER R&S	FSP40	100039	Jan. 11, 2011	Jan. 10, 2012
Mini-Circuits Power Splitter	ZN2PD-9G	NA	May 25, 2011	May 24, 2012
RF cable	SUCOFLEX 104	274403/4	Jan. 27, 2011	Jan. 26, 2012
RF cable	SUCOFLEX 104	250729/4	Jan. 27, 2011	Jan. 26, 2012
RF cable	SUCOFLEX 104	214377/4	Jan. 27, 2011	Jan. 26, 2012
JFW 20dB attenuation	50HF-020-SMA	NA	NA	NA

NOTE: The calibration interval of the above test instruments is 12 months. And the calibrations are traceable to NML/ROC and NIST/USA.

4.4.3 TEST SETUP

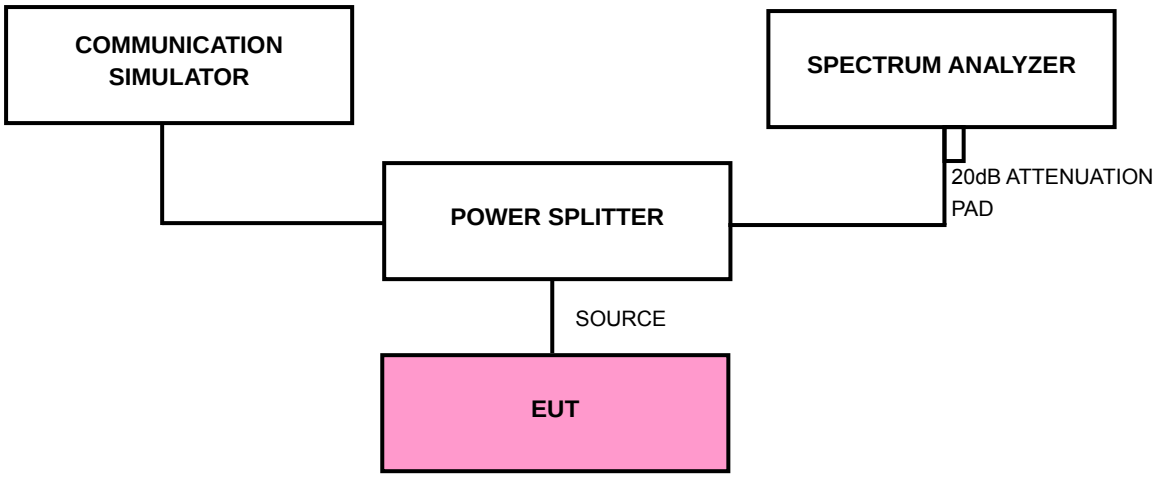

4.4.4 TEST PROCEDURES

a. The EUT makes a call to the communication simulator. The power was measured with R&S Spectrum Analyzer. All measurements were done at 2 channels 4132 and 4233 (low and high operational frequency range.)

b. The band edge measurement used the power splitter via EUT RF power connector between simulation base station and spectrum analyzer.

c. The center frequency of spectrum is the band edge frequency and span is 10MHz. RBW of the spectrum is 100kHz and VBW of the spectrum is 300kHz.

d. Record the max trace plot into the test report.

4.4.5 EUT OPERATING CONDITION

a. The EUT makes a call to the communication simulator.

b. The communication simulator station system controlled a EUT to export maximum output power under transmission mode and specific channel frequency.

4.4.6 TEST RESULTS

FOR WCDMA:

WCDMA-RMC MODE

LOWER BAND EDGE

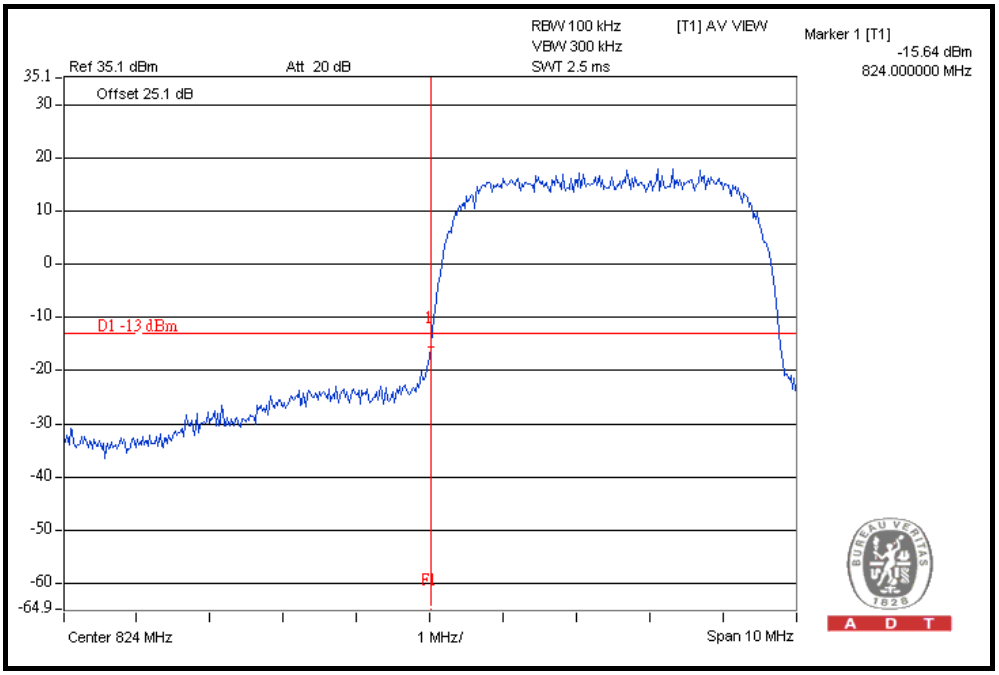

HIGHER BAND EDGE

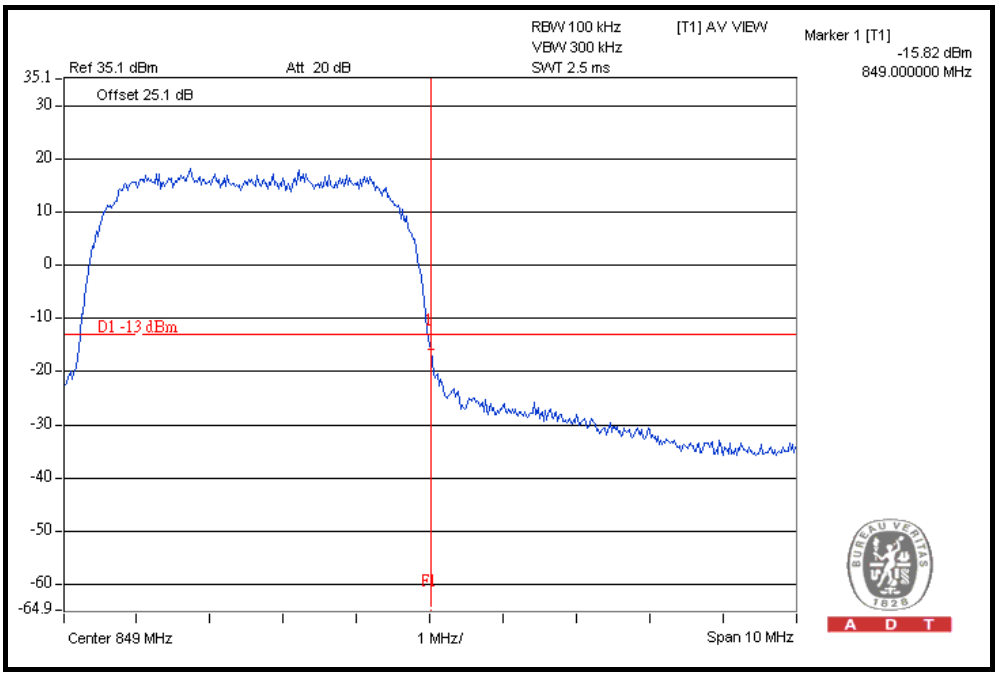

HSDPA MODE

LOWER BAND EDGE

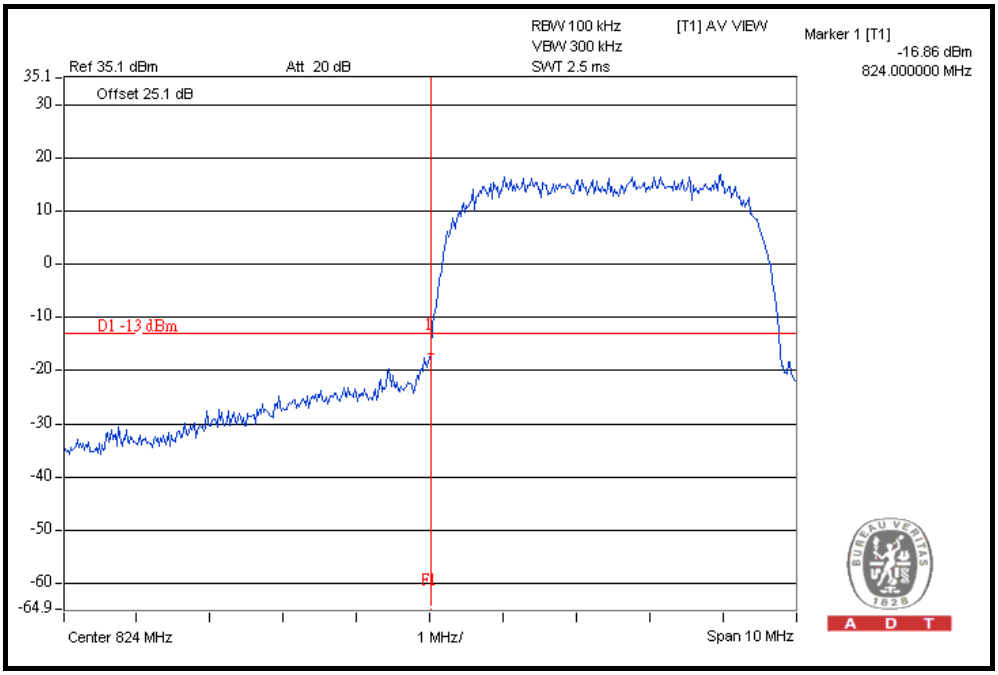

HIGHER BAND EDGE

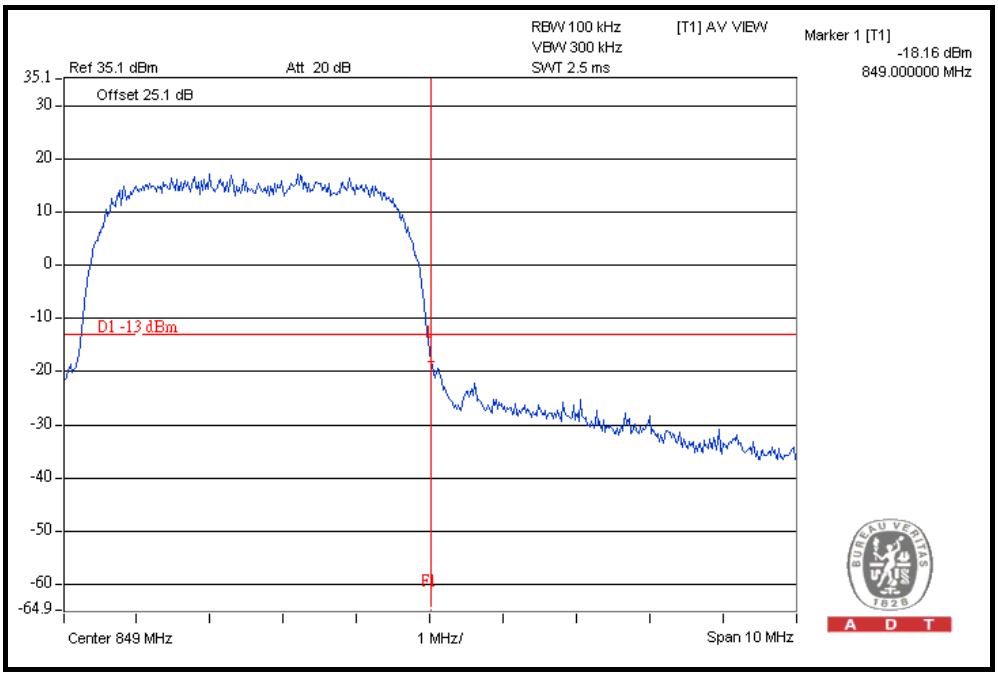

HSUPA MODE

LOWER BAND EDGE

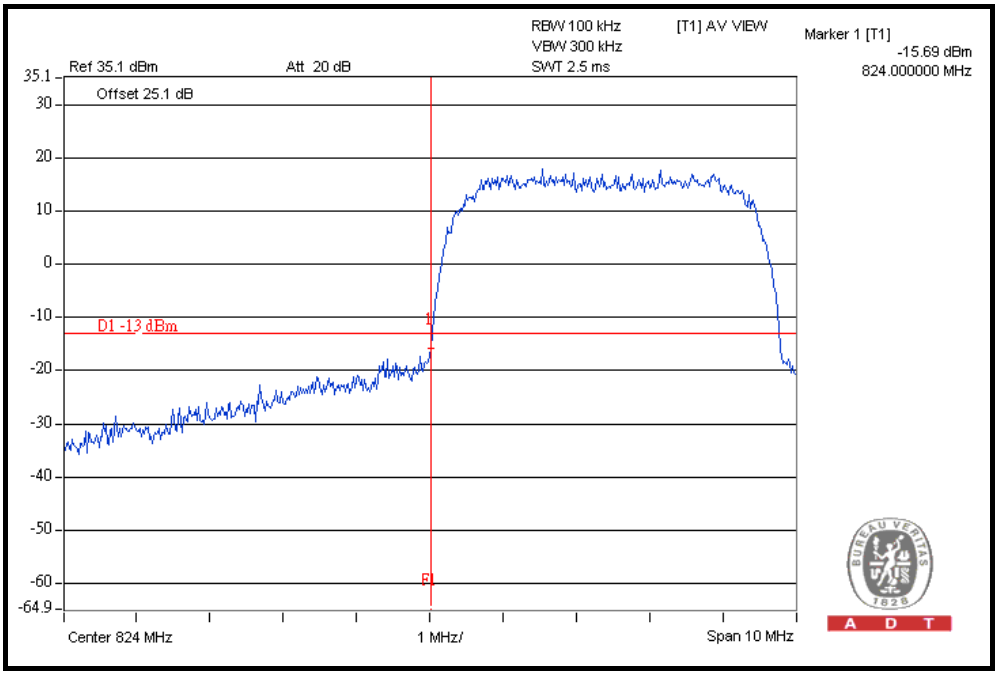

HIGHER BAND EDGE

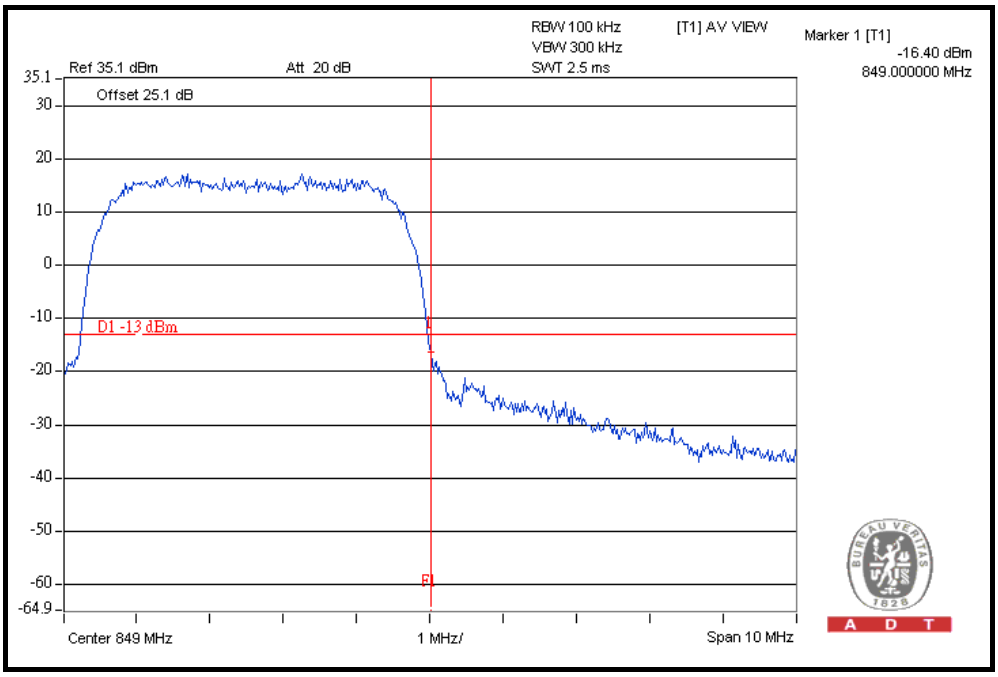

4.5 CONDUCTED SPURIOUS EMISSIONS

4.5.1 LIMITS OF CONDUCTED SPURIOUS EMISSIONS MEASUREMENT

In the FCC 22.917, On any frequency outside a licensee's frequency block within GPRS spectrum, the power of any emission shall be attenuated below the transmitter power (P) by at least 43 +10 log (P) dB. The emission limit equal to –13dBm.

4.5.2 TEST INSTRUMENTS

DESCRIPTION & MANUFACTURER	MODEL NO.	SERIAL NO.	DATE OF CALIBRATION	DUE DATE OF CALIBRATION
SPECTRUM ANALYZER R&S	FSP40	100039	Jan. 11, 2011	Jan. 10, 2012
Wainwright Instruments Band Reject Filter	WRCG 824/849-810/ 863-60/9SS	SN1	Mar. 23, 2011	Mar. 22, 2012
WI Highpass filter	WHK1.5/15G-10ST	SN1	Mar. 23, 2011	Mar. 22, 2012
Mini-Circuits Power Splitter	ZN2PD-9G	NA	May 25, 2011	May 24, 2012
RF cable	SUCOFLEX 104	274403/4	Jan. 27, 2011	Jan. 26, 2012
RF cable	SUCOFLEX 104	250729/4	Jan. 27, 2011	Jan. 26, 2012
RF cable	SUCOFLEX 104	214377/4	Jan. 27, 2011	Jan. 26, 2012
JFW 20dB attenuation	50HF-020-SMA	NA	NA	NA

NOTE: The calibration interval of the above test instruments is 12 months. And the calibrations are traceable to NML/ROC and NIST/USA.

4.5.3 TEST PROCEDURE

a. The EUT makes a phone call to the communication simulator. The power was measured with R&S Spectrum Analyzer. All measurements were done at 3 channels 4132, 4182 and 4233 (low, middle and high operational frequency range.)

b. The conducted spurious emission used the power splitter via EUT RF power connector between simulation base station and spectrum analyzer.

c. Measuring frequency range is from 9 kHz to 9GHz. 20dB attenuation pad is connected with spectrum. RBW=1MHz and VBW=3MHz is used for conducted emission measurement.

4.5.4 TEST SETUP

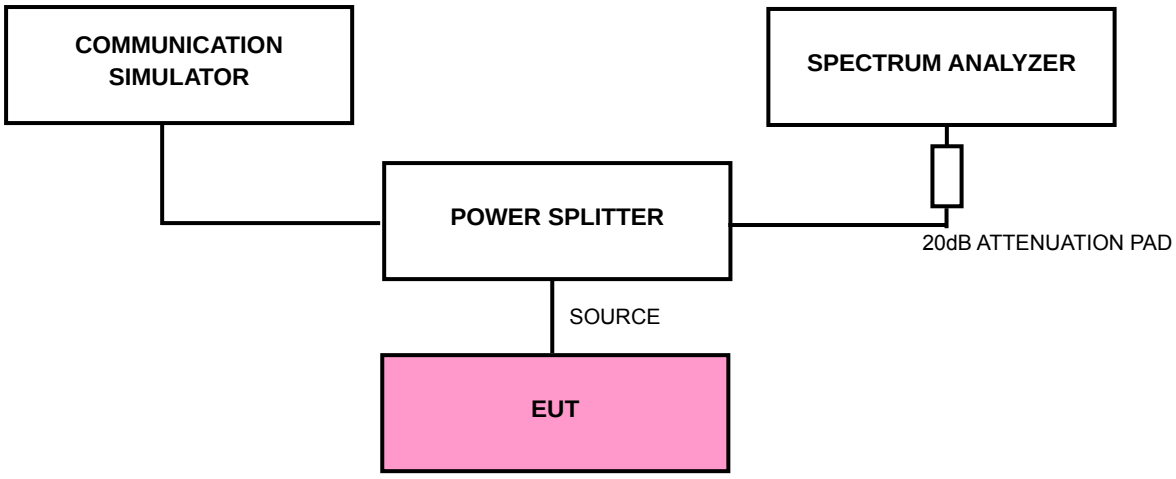

4.5.5 EUT OPERATING CONDITIONS

a. The EUT makes a call to the communication simulator.

b. The communication simulator station system controlled a EUT to export maximum output power under transmission mode and specific channel frequency.

4.5.6 TEST RESULTS

FOR WCDMA-RMC:

CH 4132: 9kHz ~ 1GHz

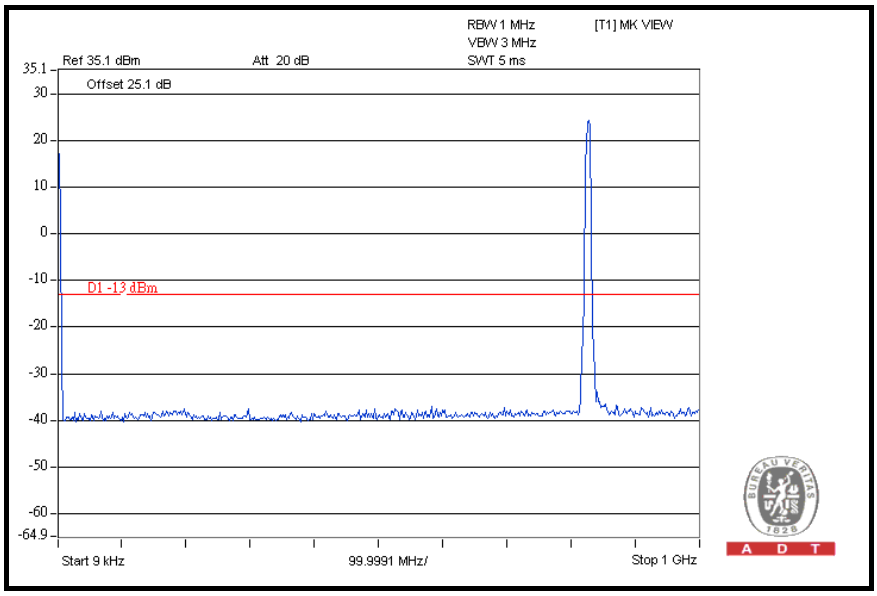

1GHz ~ 4GHz

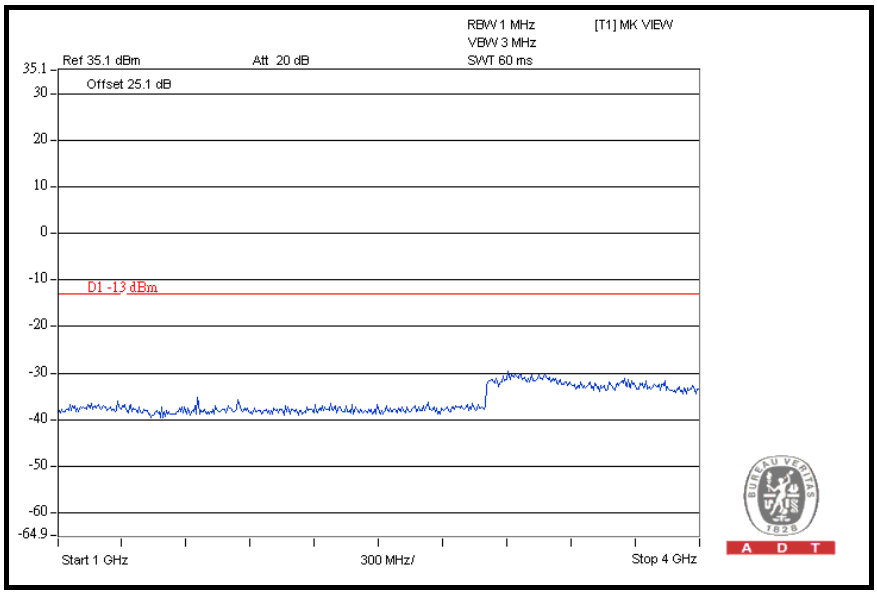

4GHz ~ 7GHz

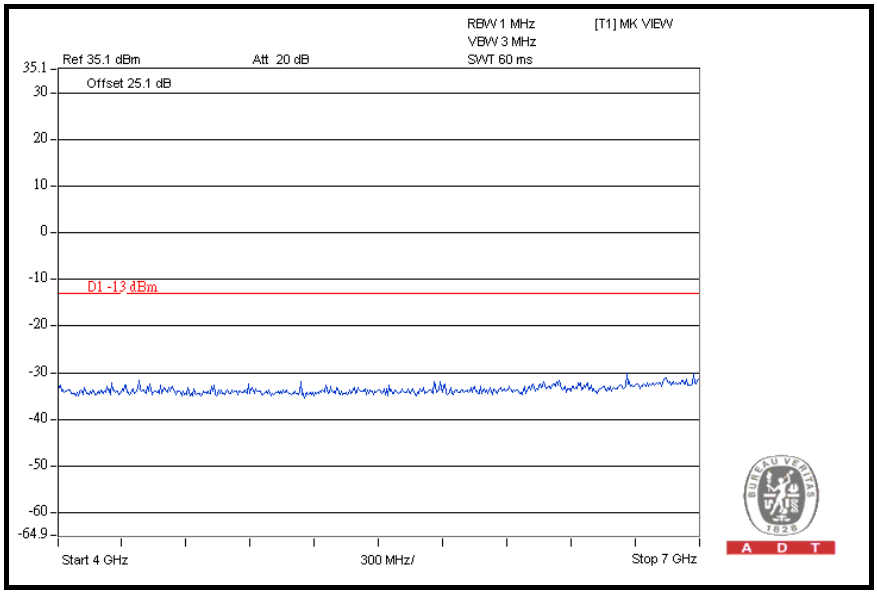

7GHz ~ 9GHz

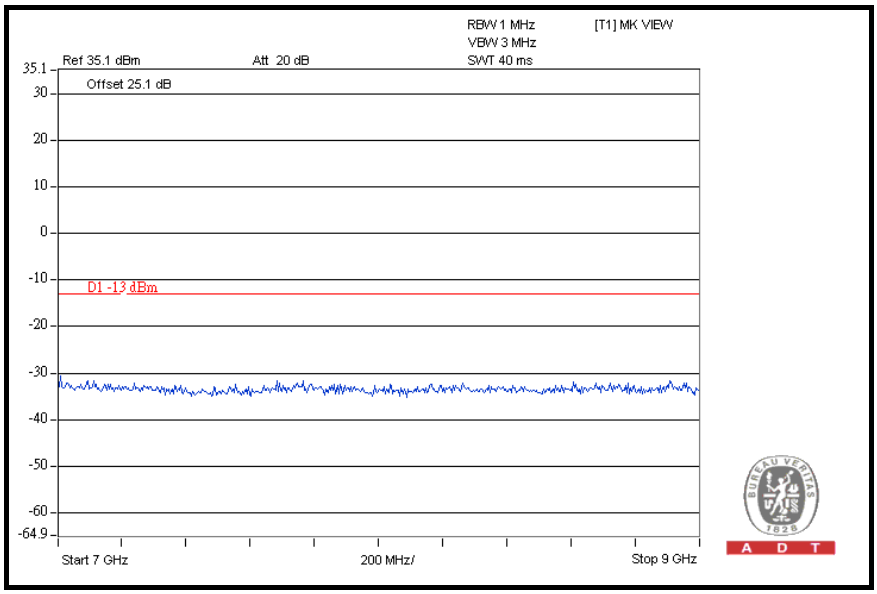

CH 4182: 9kHz ~ 1GHz

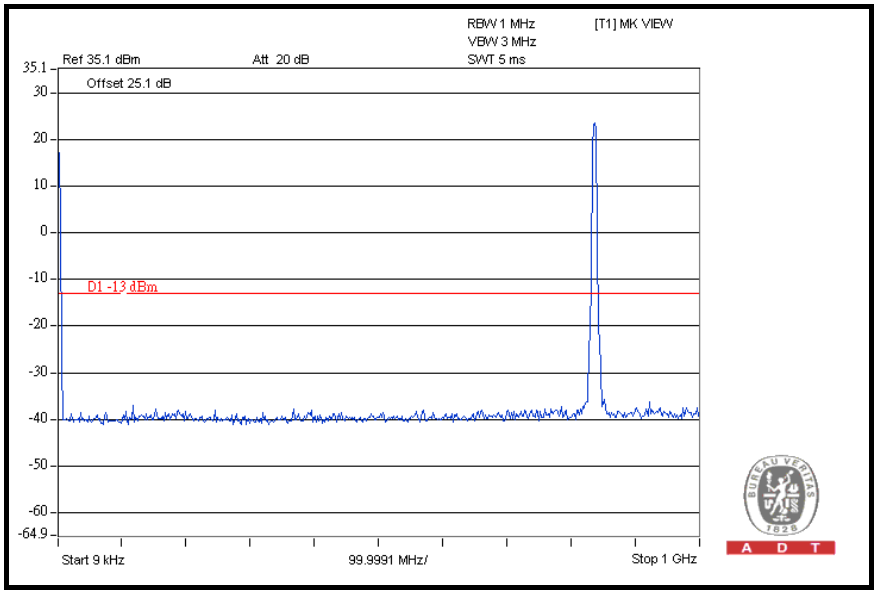

1GHz ~ 4GHz

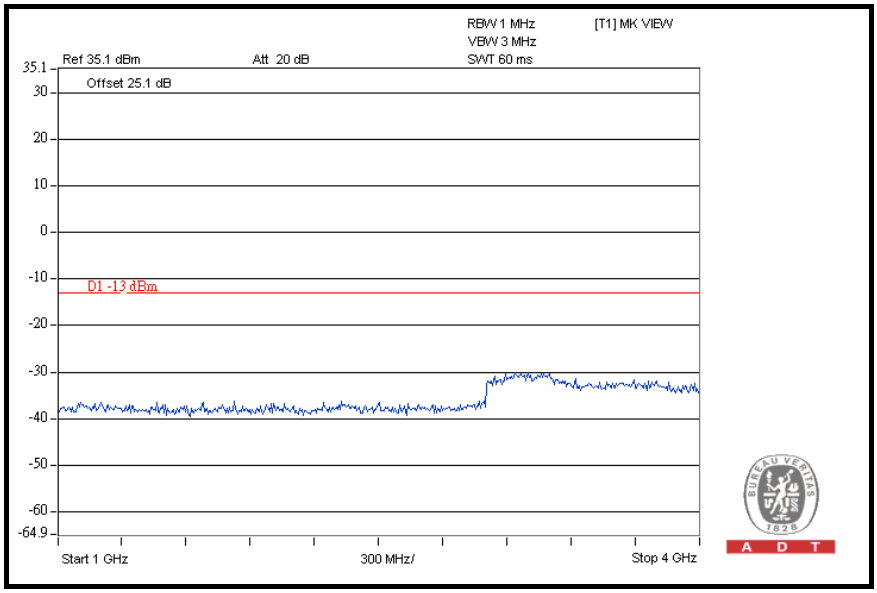

4GHz ~ 7GHz

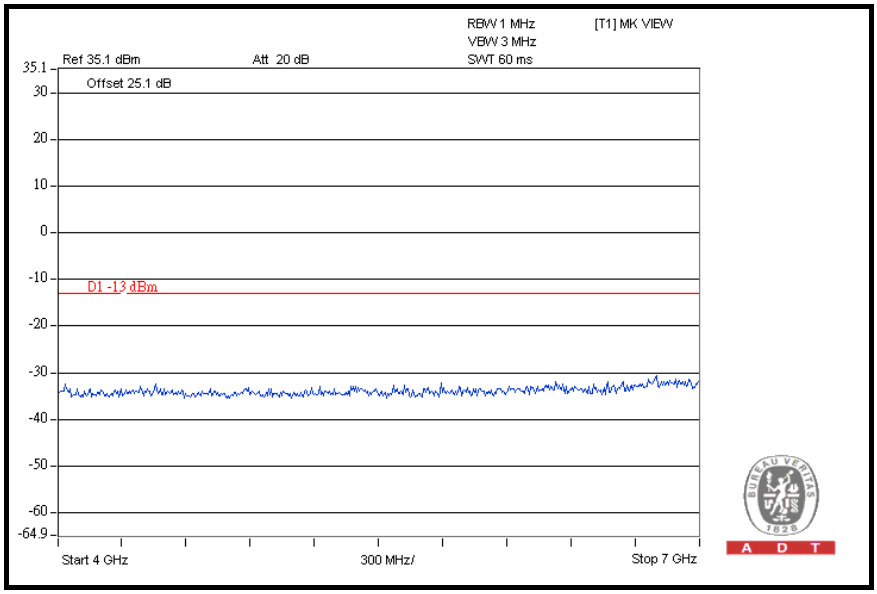

7GHz ~ 9GHz

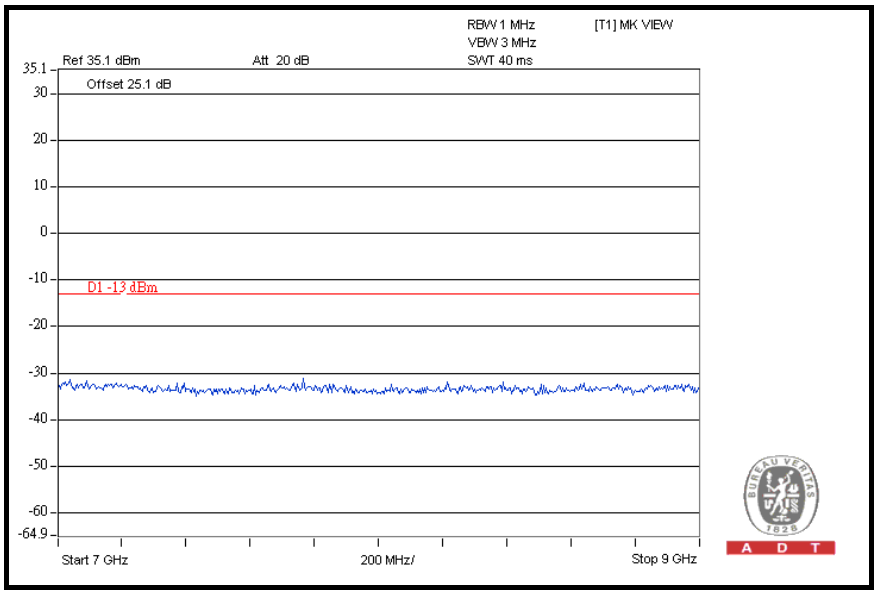

CH 4233: 9kHz ~ 1GHz

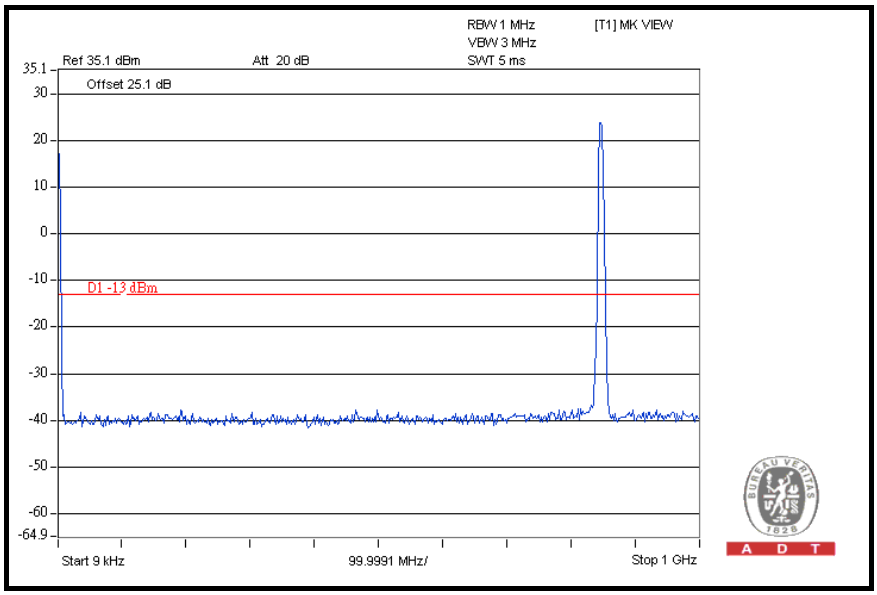

1GHz ~ 4GHz

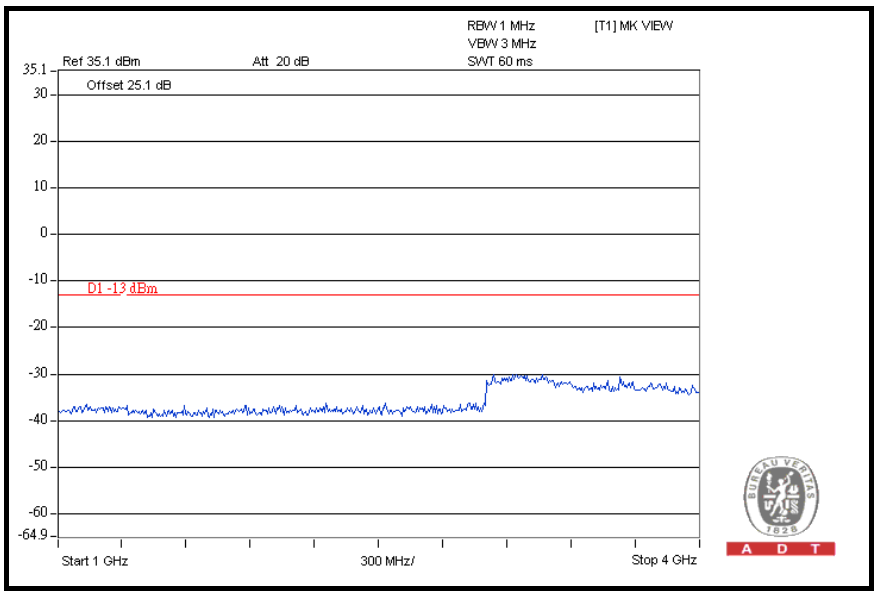

4GHz ~ 7GHz

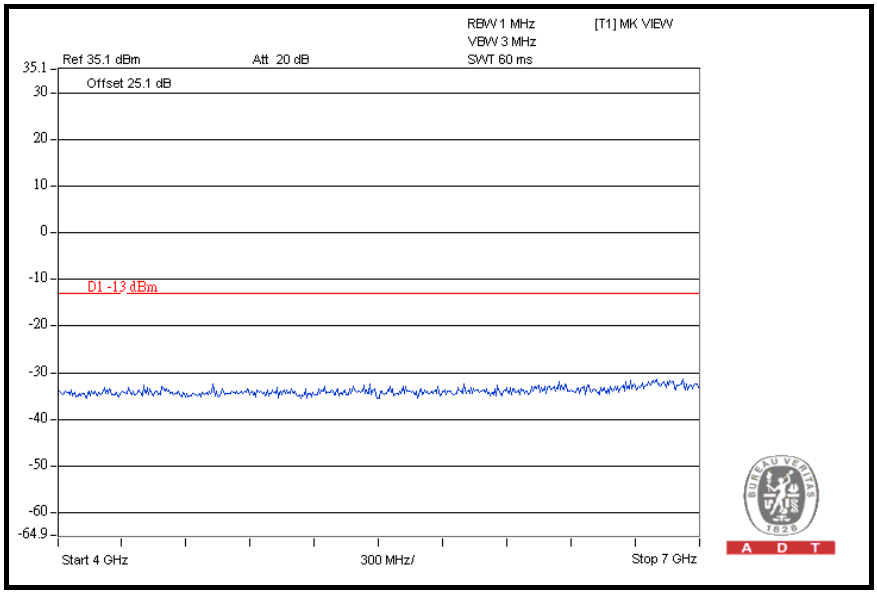

7GHz ~ 9GHz

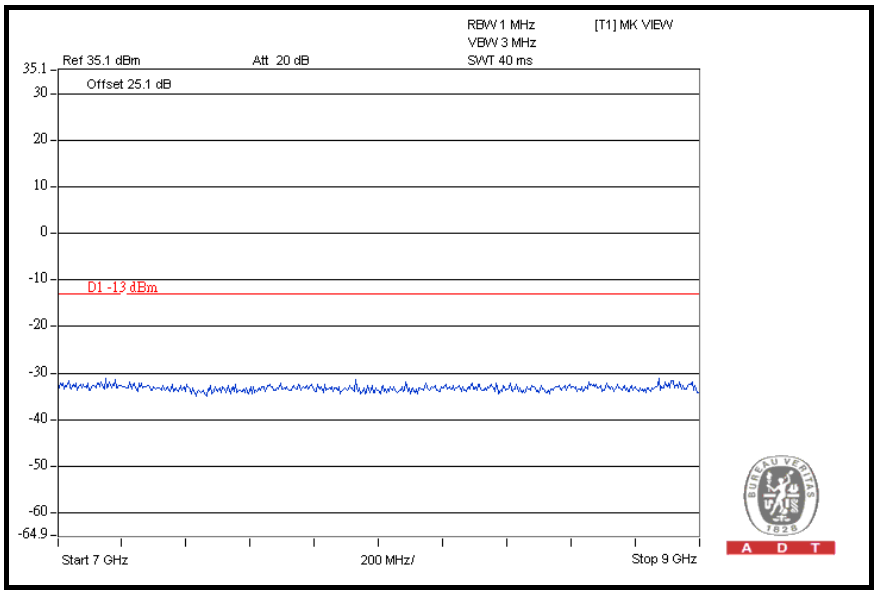

4.6 RADIATED EMISSION MEASUREMENT

4.6.1 LIMITS OF RADIATED EMISSION MEASUREMENT

In the FCC 22.917 (a), On any frequency outside a licensee's frequency block within USPCS spectrum, the power of any emission shall be attenuated below the transmitter power (P) by at least 43 + 10 log (P) dB. The emission limit equal to –13dBm.

4.6.2 TEST INSTRUMENTS

Same as 4.1.2.

4.6.3 TEST PROCEDURES

a. Substitution method is used for E.I.R.P measurement. In the semi-anechoic chamber, EUT placed on the 0.8m height of Turn Table, rotated the table around 360 degrees to search the maximum radiation power and receiver antenna shall be rotated vertical and horizontal polarization and moved height from 1m to 4m to find the maximum polar radiated power. The “Read Value” is the spectrum reading the maximum power value.

b. The substitution horn antenna is substituted for EUT at the same position and signals generator export the CW signal to the substitution antenna via a TX cable. Rotated the Turn Table and moved receiving antenna to find the maximum radiation power. Adjust output power level of S.G to get a Value of spectrum reading equal to “Read Value” of step a. Record the power level of S.G

c. EIRP = Output power level of S.G – TX cable loss + Antenna gain of substitution horn.

d. E.R.P power can be calculated form E.I.R.P power by subtracting the gain of dipole, E.R.P power = E.I.P.R power - 2.15dBi.

NOTE: The resolution bandwidth and video bandwidth of test receiver/spectrum analyzer is 1MHz/3MHz.

4.6.4 DEVIATION FROM TEST STANDARD

No deviation

4.6.5 TEST SETUP

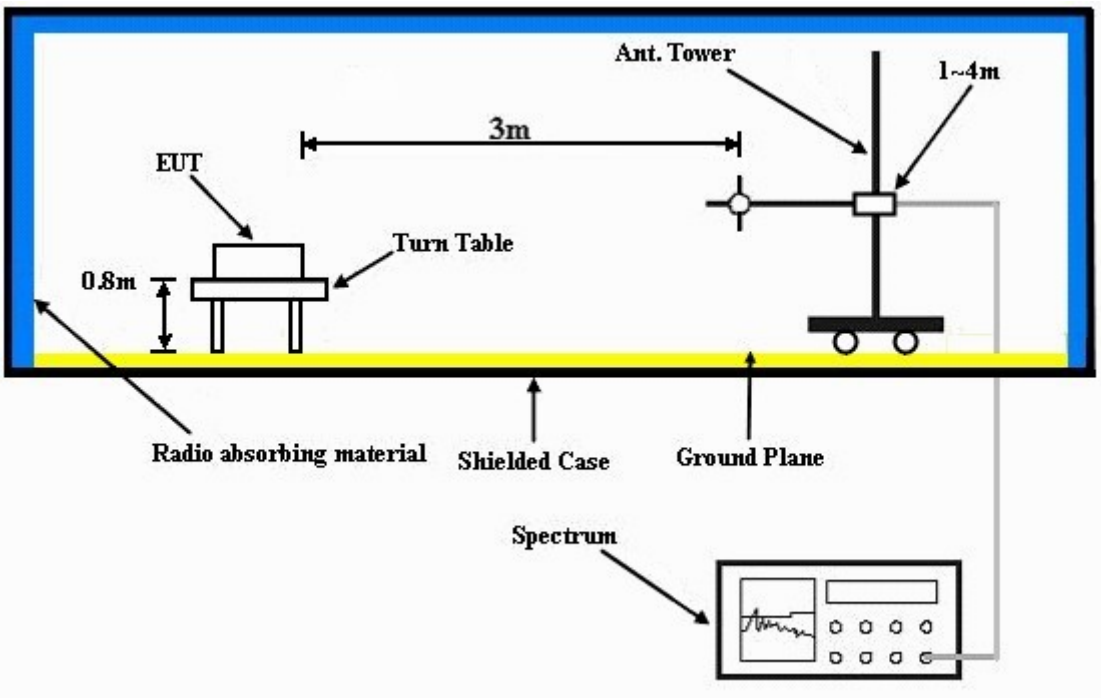

For the actual test configuration, please refer to the attached file (Test Setup Photo).

4.6.6 EUT OPERATING CONDITIONS

a. The EUT makes a call to the communication simulator.

b. The communication simulator station system controlled a EUT to export maximum output power under transmission mode and specific channel frequency.

4.6.7 TEST RESULTS

Test Mode A
Below 1GHz

FOR WCDMA-RMC:

X-AXIS

MODE	TX channel 4233					
ANTENNA POLARITY & TEST DISTANCE: HORIZONTAL AT 3 M						
No.	**Freq. (MHz)**	**Emission Level (dBuV)**	**Limit (dBm)**	**S.G Power Value (dBm)**	**Correction Factor (dB)**	**Power Value (dBm)**
1	43.61	31.8	-13.0	-54.7	-7.7	-62.4
2	74.71	33.1	-13.0	-53.7	-7.7	-61.4
3	142.75	32.9	-13.0	-53.3	-7.7	-61.0
4	377.96	27.1	-13.0	-59.5	-7.8	-67.3
5	539.30	31.5	-13.0	-55.0	-7.8	-62.8
6	675.37	33.3	-13.0	-52.9	-7.8	-60.7
ANTENNA POLARITY & TEST DISTANCE: VERTICAL AT 3 M						
No.	**Freq. (MHz)**	**Emission Level (dBuV)**	**Limit (dBm)**	**S.G Power Value (dBm)**	**Correction Factor (dB)**	**Power Value (dBm)**
1	45.55	42.5	-13.0	-44.3	-7.7	-52.0
2	72.77	38.5	-13.0	-48.0	-7.7	-55.7
3	123.31	29.9	-13.0	-56.7	-7.7	-64.4
4	473.21	34.0	-13.0	-52.8	-7.8	-60.6
5	648.16	34.9	-13.0	-52.1	-7.8	-59.9
6	739.52	35.2	-13.0	-51.1	-7.9	-59.0

REMARKS: 1. Output Power (dBm) = S.G Value (dBm) + Correction Factor (dB).
2. Correction Factor (dB) = Substitution Antenna Gain (dB) + Cable Loss (dB).

Y-AXIS

MODE	TX channel 4233					
ANTENNA POLARITY & TEST DISTANCE: HORIZONTAL AT 3 M						
No.	**Freq. (MHz)**	**Emission Level (dBuV)**	**Limit (dBm)**	**S.G Power Value (dBm)**	**Correction Factor (dB)**	**Power Value (dBm)**
1	47.49	29.9	-13.0	-56.8	-7.7	-64.5
2	74.71	33.2	-13.0	-53.4	-7.7	-61.1
3	127.19	32.2	-13.0	-54.8	-7.7	-62.5
4	195.23	28.4	-13.0	-58.6	-7.7	-66.3
5	492.65	30.3	-13.0	-56.2	-7.8	-64.0
6	650.10	34.0	-13.0	-52.6	-7.8	-60.4
ANTENNA POLARITY & TEST DISTANCE: VERTICAL AT 3 M						
No.	**Freq. (MHz)**	**Emission Level (dBuV)**	**Limit (dBm)**	**S.G Power Value (dBm)**	**Correction Factor (dB)**	**Power Value (dBm)**
1	45.55	45.1	-13.0	-41.5	-7.7	-49.2
2	72.77	41.5	-13.0	-45.1	-7.7	-52.8
3	142.75	30.5	-13.0	-56.3	-7.7	-64.0
4	271.04	29.9	-13.0	-56.7	-7.7	-64.4
5	440.16	31.9	-13.0	-54.7	-7.8	-62.5
6	681.20	34.6	-13.0	-52.1	-7.8	-59.9

REMARKS: 1. Output Power (dBm) = S.G Value (dBm) + Correction Factor (dB).
2. Correction Factor (dB) = Substitution Antenna Gain (dB) + Cable Loss (dB).

Z-AXIS

MODE	TX channel 4233					
ANTENNA POLARITY & TEST DISTANCE: HORIZONTAL AT 3 M						
No.	**Freq. (MHz)**	**Emission Level (dBuV)**	**Limit (dBm)**	**S.G Power Value (dBm)**	**Correction Factor (dB)**	**Power Value (dBm)**
1	45.55	33.1	-13.0	-53.6	-7.7	-61.3
2	74.71	36.0	-13.0	-50.8	-7.7	-58.5
3	144.69	32.9	-13.0	-53.4	-7.7	-61.1
4	218.56	33.3	-13.0	-53.0	-7.7	-60.7
5	628.72	32.9	-13.0	-53.4	-7.8	-61.2
6	716.19	35.2	-13.0	-51.2	-7.9	-59.1
ANTENNA POLARITY & TEST DISTANCE: VERTICAL AT 3 M						
No.	**Freq. (MHz)**	**Emission Level (dBuV)**	**Limit (dBm)**	**S.G Power Value (dBm)**	**Correction Factor (dB)**	**Power Value (dBm)**
1	47.49	47.6	-13.0	-39.2	-7.7	-46.9
2	72.77	42.4	-13.0	-44.8	-7.7	-52.5
3	142.75	30.4	-13.0	-56.4	-7.7	-64.1
4	204.95	31.9	-13.0	-54.8	-7.7	-62.5
5	424.61	32.4	-13.0	-54.7	-7.8	-62.5
6	473.21	33.7	-13.0	-53.3	-7.8	-61.1

REMARKS: 1. Output Power (dBm) = S.G Value (dBm) + Correction Factor (dB).
2. Correction Factor (dB) = Substitution Antenna Gain (dB) + Cable Loss (dB).

FOR HSDPA:

X-AXIS

MODE	TX channel 4233					
ANTENNA POLARITY & TEST DISTANCE: HORIZONTAL AT 3 M						
No.	**Freq. (MHz)**	**Emission Level (dBuV)**	**Limit (dBm)**	**S.G Power Value (dBm)**	**Correction Factor (dB)**	**Power Value (dBm)**
1	45.55	25.4	-13.0	-60.8	-7.7	-68.5
2	154.41	30.8	-13.0	-55.3	-7.7	-63.0
3	210.78	31.0	-13.0	-55.7	-7.7	-63.4
4	329.36	24.9	-13.0	-61.5	-7.8	-69.3
5	496.53	34.1	-13.0	-52.7	-7.8	-60.5
6	611.22	31.1	-13.0	-55.1	-7.8	-62.9
ANTENNA POLARITY & TEST DISTANCE: VERTICAL AT 3 M						
No.	**Freq. (MHz)**	**Emission Level (dBuV)**	**Limit (dBm)**	**S.G Power Value (dBm)**	**Correction Factor (dB)**	**Power Value (dBm)**
1	41.66	39.7	-13.0	-46.6	-7.7	-54.3
2	70.82	31.8	-13.0	-55.1	-7.7	-62.8
3	134.97	32.3	-13.0	-54.4	-7.7	-62.1
4	201.06	28.4	-13.0	-58.6	-7.7	-66.3
5	259.38	25.9	-13.0	-60.5	-7.7	-68.2
6	428.50	26.8	-13.0	-60.2	-7.8	-68.0

REMARKS: 1. Output Power (dBm) = S.G Value (dBm) + Correction Factor (dB).
2. Correction Factor (dB) = Substitution Antenna Gain (dB) + Cable Loss (dB).

Y-AXIS

MODE	TX channel 4233					
ANTENNA POLARITY & TEST DISTANCE: HORIZONTAL AT 3 M						
No.	**Freq. (MHz)**	**Emission Level (dBuV)**	**Limit (dBm)**	**S.G Power Value (dBm)**	**Correction Factor (dB)**	**Power Value (dBm)**
1	45.55	28.2	-13.0	-58.9	-7.7	-66.6
2	70.82	30.7	-13.0	-56.4	-7.7	-64.1
3	133.03	36.1	-13.0	-51.0	-7.7	-58.7
4	201.06	28.9	-13.0	-57.8	-7.7	-65.5
5	230.22	26.6	-13.0	-60.5	-7.7	-68.2
6	504.31	28.1	-13.0	-58.5	-7.8	-66.3
ANTENNA POLARITY & TEST DISTANCE: VERTICAL AT 3 M						
No.	**Freq. (MHz)**	**Emission Level (dBuV)**	**Limit (dBm)**	**S.G Power Value (dBm)**	**Correction Factor (dB)**	**Power Value (dBm)**
1	43.61	43.2	-13.0	-43.4	-7.7	-51.1
2	47.49	45.0	-13.0	-41.6	-7.7	-49.3
3	66.93	39.5	-13.0	-47.2	-7.7	-54.9
4	123.31	31.4	-13.0	-55.2	-7.7	-62.9
5	199.12	25.7	-13.0	-60.8	-7.7	-68.5
6	226.33	24.3	-13.0	-61.8	-7.7	-69.5

REMARKS: 1. Output Power (dBm) = S.G Value (dBm) + Correction Factor (dB).
2. Correction Factor (dB) = Substitution Antenna Gain (dB) + Cable Loss (dB).

Z-AXIS

MODE	TX channel 4233					
ANTENNA POLARITY & TEST DISTANCE: HORIZONTAL AT 3 M						
No.	**Freq. (MHz)**	**Emission Level (dBuV)**	**Limit (dBm)**	**S.G Power Value (dBm)**	**Correction Factor (dB)**	**Power Value (dBm)**
1	68.88	28.5	-13.0	-58.3	-7.7	-66.0
2	164.13	29.9	-13.0	-56.9	-7.7	-64.6
3	210.78	29.6	-13.0	-56.9	-7.7	-64.6
4	473.21	28.1	-13.0	-58.3	-7.8	-66.1
5	609.28	30.2	-13.0	-56.1	-7.8	-63.9
6	815.33	33.4	-13.0	-53.1	-7.9	-61.0
ANTENNA POLARITY & TEST DISTANCE: VERTICAL AT 3 M						
No.	**Freq. (MHz)**	**Emission Level (dBuV)**	**Limit (dBm)**	**S.G Power Value (dBm)**	**Correction Factor (dB)**	**Power Value (dBm)**
1	43.61	41.9	-13.0	-45.2	-7.7	-52.9
2	68.88	41.3	-13.0	-45.6	-7.7	-53.3
3	123.31	31.9	-13.0	-54.9	-7.7	-62.6
4	201.06	28.7	-13.0	-58.8	-7.7	-66.5
5	286.59	30.2	-13.0	-56.7	-7.7	-64.4
6	337.13	31.7	-13.0	-54.6	-7.8	-62.4

REMARKS: 1. Output Power (dBm) = S.G Value (dBm) + Correction Factor (dB).
2. Correction Factor (dB) = Substitution Antenna Gain (dB) + Cable Loss (dB).

FOR HSUPA:

X-AXIS

MODE	TX channel 4233					
ANTENNA POLARITY & TEST DISTANCE: HORIZONTAL AT 3 M						
No.	**Freq. (MHz)**	**Emission Level (dBuV)**	**Limit (dBm)**	**S.G Power Value (dBm)**	**Correction Factor (dB)**	**Power Value (dBm)**
1	45.55	30.7	-13.0	-60.8	-7.7	-68.5
2	68.88	32.6	-13.0	-55.3	-7.7	-63.0
3	140.80	32.5	-13.0	-55.7	-7.7	-63.4
4	189.40	33.3	-13.0	-61.6	-7.7	-69.3
5	282.71	27.4	-13.0	-52.8	-7.7	-60.5
6	424.61	28.0	-13.0	-55.1	-7.8	-62.9
ANTENNA POLARITY & TEST DISTANCE: VERTICAL AT 3 M						
No.	**Freq. (MHz)**	**Emission Level (dBuV)**	**Limit (dBm)**	**S.G Power Value (dBm)**	**Correction Factor (dB)**	**Power Value (dBm)**
1	43.61	42.9	-13.0	-46.6	-7.7	-54.3
2	68.88	41.2	-13.0	-55.1	-7.7	-62.8
3	142.75	32.5	-13.0	-54.4	-7.7	-62.1
4	189.40	29.4	-13.0	-58.6	-7.7	-66.3
5	212.73	29.1	-13.0	-60.5	-7.7	-68.2
6	368.24	27.1	-13.0	-60.2	-7.8	-68.0

REMARKS: 1. Output Power (dBm) = S.G Value (dBm) + Correction Factor (dB).
2. Correction Factor (dB) = Substitution Antenna Gain (dB) + Cable Loss (dB).

Y-AXIS

MODE	TX channel 4233					
ANTENNA POLARITY & TEST DISTANCE: HORIZONTAL AT 3 M						
No.	**Freq. (MHz)**	**Emission Level (dBuV)**	**Limit (dBm)**	**S.G Power Value (dBm)**	**Correction Factor (dB)**	**Power Value (dBm)**
1	70.82	33.1	-13.0	-58.9	-7.7	-66.6
2	150.52	29.5	-13.0	-56.4	-7.7	-64.1
3	189.40	34.9	-13.0	-51.0	-7.7	-58.7
4	236.05	28.6	-13.0	-57.8	-7.7	-65.5
5	424.61	29.5	-13.0	-60.4	-7.8	-68.2
6	688.98	33.4	-13.0	-58.5	-7.8	-66.3
ANTENNA POLARITY & TEST DISTANCE: VERTICAL AT 3 M						
No.	**Freq. (MHz)**	**Emission Level (dBuV)**	**Limit (dBm)**	**S.G Power Value (dBm)**	**Correction Factor (dB)**	**Power Value (dBm)**
1	45.55	41.9	-13.0	-43.4	-7.7	-51.1
2	68.88	40.8	-13.0	-41.6	-7.7	-49.3
3	123.31	29.7	-13.0	-47.2	-7.7	-54.9
4	199.12	30.2	-13.0	-55.2	-7.7	-62.9
5	282.71	25.1	-13.0	-60.8	-7.7	-68.5
6	424.61	27.8	-13.0	-61.7	-7.8	-69.5

REMARKS: 1. Output Power (dBm) = S.G Value (dBm) + Correction Factor (dB).
2. Correction Factor (dB) = Substitution Antenna Gain (dB) + Cable Loss (dB).

Z-AXIS

MODE	TX channel 4233					
ANTENNA POLARITY & TEST DISTANCE: HORIZONTAL AT 3 M						
No.	**Freq. (MHz)**	**Emission Level (dBuV)**	**Limit (dBm)**	**S.G Power Value (dBm)**	**Correction Factor (dB)**	**Power Value (dBm)**
1	43.61	31.0	-13.0	-58.3	-7.7	-66.0
2	68.88	34.1	-13.0	-56.9	-7.7	-64.6
3	146.63	31.2	-13.0	-56.9	-7.7	-64.6
4	189.40	33.4	-13.0	-58.4	-7.7	-66.1
5	282.71	28.1	-13.0	-56.2	-7.7	-63.9
6	333.25	31.1	-13.0	-53.2	-7.8	-61.0
ANTENNA POLARITY & TEST DISTANCE: VERTICAL AT 3 M						
No.	**Freq. (MHz)**	**Emission Level (dBuV)**	**Limit (dBm)**	**S.G Power Value (dBm)**	**Correction Factor (dB)**	**Power Value (dBm)**
1	45.55	42.9	-13.0	-45.2	-7.7	-52.9
2	66.93	40.6	-13.0	-45.6	-7.7	-53.3
3	123.31	30.3	-13.0	-54.9	-7.7	-62.6
4	189.40	28.9	-13.0	-58.8	-7.7	-66.5
5	210.78	28.4	-13.0	-56.7	-7.7	-64.4
6	424.61	28.4	-13.0	-54.6	-7.8	-62.4

REMARKS: 1. Output Power (dBm) = S.G Value (dBm) + Correction Factor (dB).
2. Correction Factor (dB) = Substitution Antenna Gain (dB) + Cable Loss (dB).

Above 1GHz
X-AXIS

MODE	TX channel 4132					
ANTENNA POLARITY & TEST DISTANCE: HORIZONTAL AT 3 M						
No.	Freq. (MHz)	Emission Level (dBuV)	Limit (dBm)	S.G Power Value (dBm)	Correction Factor (dB)	Power Value (dBm)
1	1652.8	49.5	-13.0	-53.9	7.6	-46.3
2	2479.2	47.1	-13.0	-57.2	8.4	-48.8
3	3305.6	53.9	-13.0	-51.8	9.9	-41.9
4	4132.0	52.8	-13.0	-52.8	9.7	-43.1
5	4958.4	57.0	-13.0	-48.3	9.5	-38.8
ANTENNA POLARITY & TEST DISTANCE: VERTICAL AT 3 M						
No.	Freq. (MHz)	Emission Level (dBuV)	Limit (dBm)	S.G Power Value (dBm)	Correction Factor (dB)	Power Value (dBm)
1	1652.8	47.8	-13.0	-55.6	7.6	-48.0
2	2479.2	34.6	-13.0	-69.7	8.4	-61.3
3	3305.6	51.0	-13.0	-54.7	9.9	-44.8
4	4132.0	51.1	-13.0	-54.5	9.7	-44.8
5	4958.4	56.6	-13.0	-48.7	9.5	-39.2
MODE	TX channel 4182					
ANTENNA POLARITY & TEST DISTANCE: HORIZONTAL AT 3 M						
No.	Freq. (MHz)	Emission Level (dBuV)	Limit (dBm)	S.G Power Value (dBm)	Correction Factor (dB)	Power Value (dBm)
1	1672.8	48.6	-13.0	-54.8	7.7	-47.1
2	2509.2	45.3	-13.0	-58.9	8.4	-50.5
3	3345.6	50.0	-13.0	-55.9	9.9	-46.0
4	3345.6	54.5	-13.0	-51.0	9.7	-41.3
5	4182.0	57.1	-13.0	-48.4	9.5	-38.9
ANTENNA POLARITY & TEST DISTANCE: VERTICAL AT 3 M						
No.	Freq. (MHz)	Emission Level (dBuV)	Limit (dBm)	S.G Power Value (dBm)	Correction Factor (dB)	Power Value (dBm)
1	1672.8	48.1	-13.0	-55.3	7.7	-47.6
2	2509.2	40.4	-13.0	-63.8	8.4	-55.4
3	3345.6	50.5	-13.0	-55.4	9.9	-45.5
4	3345.6	51.2	-13.0	-54.3	9.7	-44.6
5	4182.0	57.6	-13.0	-47.9	9.5	-38.4

REMARKS: 1. Output Power (dBm) = S.G Value (dBm) + Correction Factor (dB).
2. Correction Factor (dB) = Substitution Antenna Gain (dB) + Cable Loss (dB).

MODE	TX channel 4233					
ANTENNA POLARITY & TEST DISTANCE: HORIZONTAL AT 3 M						
No.	**Freq. (MHz)**	**Emission Level (dBuV)**	**Limit (dBm)**	**S.G Power Value (dBm)**	**Correction Factor (dB)**	**Power Value (dBm)**
1	1693.2	53.6	-13.0	-50.2	7.9	-42.3
2	2539.8	44.2	-13.0	-60.3	8.5	-51.8
3	3386.4	51.2	-13.0	-54.5	9.9	-44.6
4	4233.0	57.2	-13.0	-48.5	9.7	-38.8
5	5079.6	57.1	-13.0	-48.3	9.6	-38.7
ANTENNA POLARITY & TEST DISTANCE: VERTICAL AT 3 M						
No.	**Freq. (MHz)**	**Emission Level (dBuV)**	**Limit (dBm)**	**S.G Power Value (dBm)**	**Correction Factor (dB)**	**Power Value (dBm)**
1	1693.2	51.4	-13.0	-52.4	7.9	-44.5
2	2539.8	41.4	-13.0	-63.1	8.5	-54.6
3	3386.4	50.7	-13.0	-55.0	9.9	-45.1
4	4233.0	57.5	-13.0	-48.2	9.7	-38.5
5	5079.6	58.1	-13.0	-47.3	9.6	-37.7

REMARKS: 1. Output Power (dBm) = S.G Value (dBm) + Correction Factor (dB).
2. Correction Factor (dB) = Substitution Antenna Gain (dB) + Cable Loss (dB).

Y-AXIS

MODE	TX channel 4132					
ANTENNA POLARITY & TEST DISTANCE: HORIZONTAL AT 3 M						
No.	**Freq. (MHz)**	**Emission Level (dBuV)**	**Limit (dBm)**	**S.G Power Value (dBm)**	**Correction Factor (dB)**	**Power Value (dBm)**
1	1652.8	48.1	-13.0	-55.3	7.6	-47.7
2	2479.2	42.5	-13.0	-61.8	8.4	-53.4
3	3305.6	52.9	-13.0	-52.8	9.9	-42.9
4	4132.0	55.8	-13.0	-49.8	9.7	-40.1
5	4958.4	56.3	-13.0	-49.0	9.5	-39.5
ANTENNA POLARITY & TEST DISTANCE: VERTICAL AT 3 M						
No.	**Freq. (MHz)**	**Emission Level (dBuV)**	**Limit (dBm)**	**S.G Power Value (dBm)**	**Correction Factor (dB)**	**Power Value (dBm)**
1	1652.8	49.8	-13.0	-53.6	7.6	-46.0
2	2479.2	42.3	-13.0	-62.0	8.4	-53.6
3	3305.6	52.5	-13.0	-53.2	9.9	-43.3
4	4132.0	54.8	-13.0	-50.8	9.7	-41.1
5	**4958.4**	**61.4**	**-13.0**	**-43.9**	**9.5**	**-34.4**
MODE	TX channel 4182					
ANTENNA POLARITY & TEST DISTANCE: HORIZONTAL AT 3 M						
No.	**Freq. (MHz)**	**Emission Level (dBuV)**	**Limit (dBm)**	**S.G Power Value (dBm)**	**Correction Factor (dB)**	**Power Value (dBm)**
1	1672.8	49.0	-13.0	-54.4	7.7	-46.7
2	2509.2	43.4	-13.0	-60.8	8.4	-52.4
3	3345.6	51.6	-13.0	-54.3	9.9	-44.4
4	3345.6	37.0	-13.0	-68.5	9.7	-58.8
5	4182.0	57.8	-13.0	-47.7	9.5	-38.2
ANTENNA POLARITY & TEST DISTANCE: VERTICAL AT 3 M						
No.	**Freq. (MHz)**	**Emission Level (dBuV)**	**Limit (dBm)**	**S.G Power Value (dBm)**	**Correction Factor (dB)**	**Power Value (dBm)**
1	1672.8	48.7	-13.0	-54.7	7.7	-47.0
2	2509.2	41.4	-13.0	-62.8	8.4	-54.4
3	3345.6	51.1	-13.0	-54.8	9.9	-44.9
4	3345.6	52.3	-13.0	-53.2	9.7	-43.5
5	4182.0	59.1	-13.0	-46.4	9.5	-36.9

REMARKS: 1. Output Power (dBm) = S.G Value (dBm) + Correction Factor (dB).
2. Correction Factor (dB) = Substitution Antenna Gain (dB) + Cable Loss (dB).

MODE	TX channel 4233					
ANTENNA POLARITY & TEST DISTANCE: HORIZONTAL AT 3 M						
No.	**Freq. (MHz)**	**Emission Level (dBuV)**	**Limit (dBm)**	**S.G Power Value (dBm)**	**Correction Factor (dB)**	**Power Value (dBm)**
1	1693.2	47.5	-13.0	-56.3	7.9	-48.4
2	2539.8	41.2	-13.0	-63.3	8.5	-54.8
3	3386.4	52.3	-13.0	-53.4	9.9	-43.5
4	3386.4	53.9	-13.0	-51.8	9.7	-42.1
5	4233.0	55.1	-13.0	-50.3	9.6	-40.7
ANTENNA POLARITY & TEST DISTANCE: VERTICAL AT 3 M						
No.	**Freq. (MHz)**	**Emission Level (dBuV)**	**Limit (dBm)**	**S.G Power Value (dBm)**	**Correction Factor (dB)**	**Power Value (dBm)**
1	1693.2	51.2	-13.0	-52.6	7.9	-44.7
2	2539.8	41.7	-13.0	-62.8	8.5	-54.3
3	3386.4	53.8	-13.0	-51.9	9.9	-42.0
4	3386.4	57.2	-13.0	-48.5	9.7	-38.8
5	4233.0	60.2	-13.0	-45.2	9.6	-35.6

REMARKS: 1. Output Power (dBm) = S.G Value (dBm) + Correction Factor (dB).
2. Correction Factor (dB) = Substitution Antenna Gain (dB) + Cable Loss (dB).

Z-AXIS

MODE	TX channel 4132					
ANTENNA POLARITY & TEST DISTANCE: HORIZONTAL AT 3 M						
No.	**Freq. (MHz)**	**Emission Level (dBuV)**	**Limit (dBm)**	**S.G Power Value (dBm)**	**Correction Factor (dB)**	**Power Value (dBm)**
1	1652.8	44.7	-13.0	-58.7	7.6	-51.1
2	2479.2	46.2	-13.0	-58.1	8.4	-49.7
3	3305.6	48.6	-13.0	-57.1	9.9	-47.2
4	4132.0	54.0	-13.0	-51.6	9.7	-41.9
5	4958.4	56.4	-13.0	-48.9	9.5	-39.4
ANTENNA POLARITY & TEST DISTANCE: VERTICAL AT 3 M						
No.	**Freq. (MHz)**	**Emission Level (dBuV)**	**Limit (dBm)**	**S.G Power Value (dBm)**	**Correction Factor (dB)**	**Power Value (dBm)**
1	1652.8	49.9	-13.0	-53.5	7.6	-45.9
2	2479.2	47.7	-13.0	-56.6	8.4	-48.2
3	3305.6	52.9	-13.0	-52.8	9.9	-42.9
4	4132.0	52.2	-13.0	-53.4	9.7	-43.7
5	4958.4	59.8	-13.0	-45.5	9.5	-36.0
MODE	TX channel 4182					
ANTENNA POLARITY & TEST DISTANCE: HORIZONTAL AT 3 M						
No.	**Freq. (MHz)**	**Emission Level (dBuV)**	**Limit (dBm)**	**S.G Power Value (dBm)**	**Correction Factor (dB)**	**Power Value (dBm)**
1	1672.8	45.6	-13.0	-57.8	7.7	-50.1
2	2509.2	47.4	-13.0	-56.8	8.4	-48.4
3	3345.6	49.9	-13.0	-56.0	9.9	-46.1
4	4182.0	52.2	-13.0	-53.3	9.7	-43.6
5	5018.4	57.8	-13.0	-47.7	9.5	-38.2
ANTENNA POLARITY & TEST DISTANCE: VERTICAL AT 3 M						
No.	**Freq. (MHz)**	**Emission Level (dBuV)**	**Limit (dBm)**	**S.G Power Value (dBm)**	**Correction Factor (dB)**	**Power Value (dBm)**
1	1672.8	47.7	-13.0	-55.7	7.7	-48.0
2	2509.2	45.8	-13.0	-58.4	8.4	-50.0
3	3345.6	51.3	-13.0	-54.6	9.9	-44.7
4	4182.0	50.7	-13.0	-54.8	9.7	-45.1
5	5018.4	57.8	-13.0	-47.7	9.5	-38.2

REMARKS: 1. Output Power (dBm) = S.G Value (dBm) + Correction Factor (dB).
2. Correction Factor (dB) = Substitution Antenna Gain (dB) + Cable Loss (dB).

MODE	TX channel 4233					
ANTENNA POLARITY & TEST DISTANCE: HORIZONTAL AT 3 M						
No.	**Freq. (MHz)**	**Emission Level (dBuV)**	**Limit (dBm)**	**S.G Power Value (dBm)**	**Correction Factor (dB)**	**Power Value (dBm)**
1	1693.2	44.2	-13.0	-59.6	7.9	-51.7
2	2539.8	46.8	-13.0	-57.7	8.5	-49.2
3	3386.4	49.4	-13.0	-56.3	9.9	-46.4
4	4233.0	55.6	-13.0	-50.1	9.7	-40.4
5	5079.6	57.1	-13.0	-48.3	9.6	-38.7
ANTENNA POLARITY & TEST DISTANCE: VERTICAL AT 3 M						
No.	**Freq. (MHz)**	**Emission Level (dBuV)**	**Limit (dBm)**	**S.G Power Value (dBm)**	**Correction Factor (dB)**	**Power Value (dBm)**
1	1693.2	48.6	-13.0	-55.2	7.9	-47.3
2	2539.8	46.5	-13.0	-58.0	8.5	-49.5
3	3386.4	52.3	-13.0	-53.4	9.9	-43.5
4	4233.0	51.8	-13.0	-53.9	9.7	-44.2
5	5079.6	58.4	-13.0	-47.0	9.6	-37.4

REMARKS: 1. Output Power (dBm) = S.G Value (dBm) + Correction Factor (dB).
2. Correction Factor (dB) = Substitution Antenna Gain (dB) + Cable Loss (dB).

FOR HSDPA BAND: X-AXIS

MODE	TX channel 4233					
ANTENNA POLARITY & TEST DISTANCE: HORIZONTAL AT 3 M						
No.	**Freq. (MHz)**	**Emission Level (dBuV)**	**Limit (dBm)**	**S.G Power Value (dBm)**	**Correction Factor (dB)**	**Power Value (dBm)**
1	1693.2	52.5	-13.0	-51.3	7.9	-43.4
2	2539.8	43.4	-13.0	-61.1	8.5	-52.6
3	3386.4	50.2	-13.0	-55.5	9.9	-45.6
4	4233.0	56.1	-13.0	-49.6	9.7	-39.9
5	5079.6	56.0	-13.0	-49.4	9.6	-39.8
ANTENNA POLARITY & TEST DISTANCE: VERTICAL AT 3 M						
No.	**Freq. (MHz)**	**Emission Level (dBuV)**	**Limit (dBm)**	**S.G Power Value (dBm)**	**Correction Factor (dB)**	**Power Value (dBm)**
1	1693.2	50.0	-13.0	-53.8	7.9	-45.9
2	2539.8	40.0	-13.0	-64.5	8.5	-56.0
3	3386.4	48.5	-13.0	-57.2	9.9	-47.3
4	4233.0	56.0	-13.0	-49.7	9.7	-40.0
5	5079.6	56.8	-13.0	-48.6	9.6	-39.0

Y-AXIS

MODE	TX channel 4233					
ANTENNA POLARITY & TEST DISTANCE: HORIZONTAL AT 3 M						
No.	**Freq. (MHz)**	**Emission Level (dBuV)**	**Limit (dBm)**	**S.G Power Value (dBm)**	**Correction Factor (dB)**	**Power Value (dBm)**
1	1693.2	46.0	-13.0	-57.8	7.9	-49.9
2	2539.8	40.3	-13.0	-64.2	8.5	-55.7
3	3386.4	50.8	-13.0	-54.9	9.9	-45.0
4	3386.4	51.8	-13.0	-53.9	9.7	-44.2
5	4233.0	54.0	-13.0	-51.4	9.6	-41.8
ANTENNA POLARITY & TEST DISTANCE: VERTICAL AT 3 M						
No.	**Freq. (MHz)**	**Emission Level (dBuV)**	**Limit (dBm)**	**S.G Power Value (dBm)**	**Correction Factor (dB)**	**Power Value (dBm)**
1	1693.2	50.2	-13.0	-53.6	7.9	-45.7
2	2539.8	40.0	-13.0	-64.5	8.5	-56.0
3	3386.4	52.1	-13.0	-53.6	9.9	-43.7
4	3386.4	56.2	-13.0	-49.5	9.7	-39.8
5	4233.0	58.9	-13.0	-46.5	9.6	-36.9

REMARKS: 1. Output Power (dBm) = S.G Value (dBm) + Correction Factor (dB).
2. Correction Factor (dB) = Substitution Antenna Gain (dB) + Cable Loss (dB).

Z-AXIS

MODE	TX channel 4233					
ANTENNA POLARITY & TEST DISTANCE: HORIZONTAL AT 3 M						
No.	**Freq. (MHz)**	**Emission Level (dBuV)**	**Limit (dBm)**	**S.G Power Value (dBm)**	**Correction Factor (dB)**	**Power Value (dBm)**
1	1693.2	43.8	-13.0	-60.0	7.9	-52.1
2	2539.8	46.1	-13.0	-58.4	8.5	-49.9
3	3386.4	48.6	-13.0	-57.1	9.9	-47.2
4	4233.0	54.8	-13.0	-50.9	9.7	-41.2
5	5079.6	56.7	-13.0	-48.7	9.6	-39.1
ANTENNA POLARITY & TEST DISTANCE: VERTICAL AT 3 M						
No.	**Freq. (MHz)**	**Emission Level (dBuV)**	**Limit (dBm)**	**S.G Power Value (dBm)**	**Correction Factor (dB)**	**Power Value (dBm)**
1	1693.2	48.4	-13.0	-55.4	7.9	-47.5
2	2539.8	46.3	-13.0	-58.2	8.5	-49.7
3	3386.4	52.1	-13.0	-53.6	9.9	-43.7
4	4233.0	51.3	-13.0	-54.4	9.7	-44.7
5	5079.6	57.9	-13.0	-47.5	9.6	-37.9

REMARKS: 1. Output Power (dBm) = S.G Value (dBm) + Correction Factor (dB).
2. Correction Factor (dB) = Substitution Antenna Gain (dB) + Cable Loss (dB).

FOR HSUPA BAND: X-AXIS

MODE	TX channel 4233					
ANTENNA POLARITY & TEST DISTANCE: HORIZONTAL AT 3 M						
No.	**Freq. (MHz)**	**Emission Level (dBuV)**	**Limit (dBm)**	**S.G Power Value (dBm)**	**Correction Factor (dB)**	**Power Value (dBm)**
1	1693.2	53.1	-13.0	-50.7	7.9	-42.8
2	2539.8	43.9	-13.0	-60.6	8.5	-52.1
3	3386.4	50.8	-13.0	-54.9	9.9	-45.0
4	4233.0	56.7	-13.0	-49.0	9.7	-39.3
5	5079.6	56.3	-13.0	-49.1	9.6	-39.5
ANTENNA POLARITY & TEST DISTANCE: VERTICAL AT 3 M						
No.	**Freq. (MHz)**	**Emission Level (dBuV)**	**Limit (dBm)**	**S.G Power Value (dBm)**	**Correction Factor (dB)**	**Power Value (dBm)**
1	1693.2	50.3	-13.0	-53.5	7.9	-45.6
2	2539.8	40.4	-13.0	-64.1	8.5	-55.6
3	3386.4	48.9	-13.0	-56.8	9.9	-46.9
4	4233.0	56.7	-13.0	-49.0	9.7	-39.3
5	5079.6	57.2	-13.0	-48.2	9.6	-38.6

Y-AXIS

MODE	TX channel 4233					
ANTENNA POLARITY & TEST DISTANCE: HORIZONTAL AT 3 M						
No.	**Freq. (MHz)**	**Emission Level (dBuV)**	**Limit (dBm)**	**S.G Power Value (dBm)**	**Correction Factor (dB)**	**Power Value (dBm)**
1	1693.2	46.6	-13.0	-57.2	7.9	-49.3
2	2539.8	40.7	-13.0	-63.8	8.5	-55.3
3	3386.4	50.9	-13.0	-54.8	9.9	-44.9
4	3386.4	51.5	-13.0	-54.2	9.7	-44.5
5	4233.0	54.8	-13.0	-50.6	9.6	-41.0
ANTENNA POLARITY & TEST DISTANCE: VERTICAL AT 3 M						
No.	**Freq. (MHz)**	**Emission Level (dBuV)**	**Limit (dBm)**	**S.G Power Value (dBm)**	**Correction Factor (dB)**	**Power Value (dBm)**
1	1693.2	50.6	-13.0	-53.2	7.9	-45.3
2	2539.8	40.2	-13.0	-64.3	8.5	-55.8
3	3386.4	52.6	-13.0	-53.1	9.9	-43.2
4	3386.4	56.0	-13.0	-49.7	9.7	-40.0
5	4233.0	58.3	-13.0	-47.1	9.6	-37.5

REMARKS: 1. Output Power (dBm) = S.G Value (dBm) + Correction Factor (dB).
2. Correction Factor (dB) = Substitution Antenna Gain (dB) + Cable Loss (dB).

Z-AXIS

MODE	TX channel 4233					
ANTENNA POLARITY & TEST DISTANCE: HORIZONTAL AT 3 M						
No.	**Freq. (MHz)**	**Emission Level (dBuV)**	**Limit (dBm)**	**S.G Power Value (dBm)**	**Correction Factor (dB)**	**Power Value (dBm)**
1	1693.2	43.2	-13.0	-60.6	7.9	-52.7
2	2539.8	46.5	-13.0	-58.0	8.5	-49.5
3	3386.4	48.9	-13.0	-56.8	9.9	-46.9
4	4233.0	54.9	-13.0	-50.8	9.7	-41.1
5	5079.6	56.2	-13.0	-49.2	9.6	-39.6
ANTENNA POLARITY & TEST DISTANCE: VERTICAL AT 3 M						
No.	**Freq. (MHz)**	**Emission Level (dBuV)**	**Limit (dBm)**	**S.G Power Value (dBm)**	**Correction Factor (dB)**	**Power Value (dBm)**
1	1693.2	48.9	-13.0	-54.9	7.9	-47.0
2	2539.8	46.8	-13.0	-57.7	8.5	-49.2
3	3386.4	52.5	-13.0	-53.2	9.9	-43.3
4	4233.0	51.0	-13.0	-54.7	9.7	-45.0
5	5079.6	58.1	-13.0	-47.3	9.6	-37.7

REMARKS: 1. Output Power (dBm) = S.G Value (dBm) + Correction Factor (dB).
2. Correction Factor (dB) = Substitution Antenna Gain (dB) + Cable Loss (dB).

Test Mode B

Bureau Veritas Consumer Products Services Ltd.,Taoyuan Branch

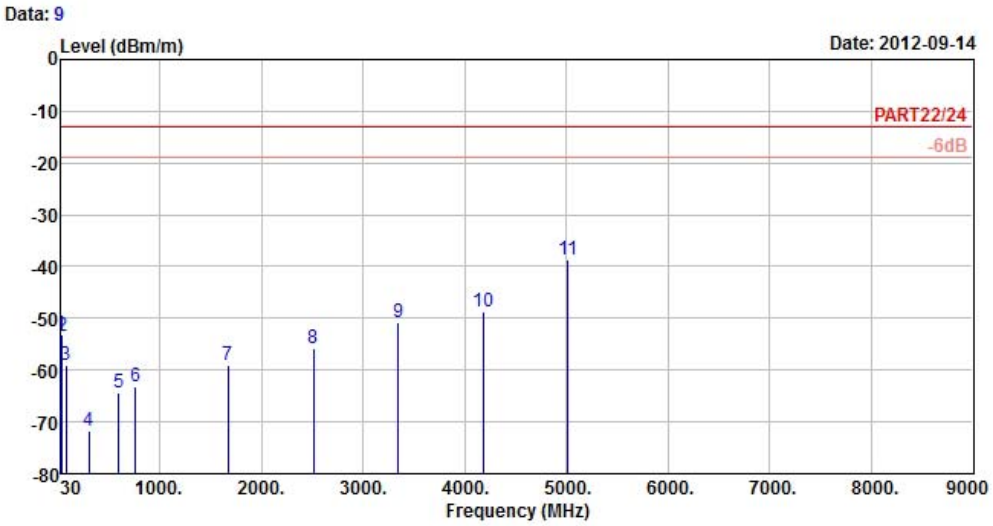

Site : 966 Chamber 5
Condition : PART22/24 3m EIRP_RSE_1G~19G_3 HORIZONTAL
Brand/Model: F-01E
Remark : Band V Link
Tested by : Kay Wu
Temprature : 25℃
Humidity : 65%
Plane : Z

	Freq	Level	Read Level	Limit Line	Over Limit	Factor	Remark
	MHz	dBm/m	dBm	dBm/m	dB	dB/m	
1	32.70	-53.03	-51.92	-13.00	-40.03	-1.11	Peak
2	43.23	-53.47	-52.21	-13.00	-40.47	-1.26	Peak
3	76.17	-59.02	-49.09	-13.00	-46.02	-9.93	Peak
4	300.00	-71.68	-65.30	-13.00	-58.68	-6.38	Peak
5	596.10	-64.26	-63.80	-13.00	-51.26	-0.46	Peak
6	757.80	-63.04	-64.88	-13.00	-50.04	1.84	Peak
7	1672.80	-59.18	-46.36	-13.00	-46.18	-12.82	Peak
8	2509.20	-55.90	-46.73	-13.00	-42.90	-9.17	Peak
9	3345.60	-50.77	-42.96	-13.00	-37.77	-7.81	Peak
10	4182.00	-48.83	-43.25	-13.00	-35.83	-5.58	Peak
11 pp	5018.40	-38.67	-36.95	-13.00	-25.67	-1.72	Peak

Bureau Veritas Consumer Products Services Ltd.,Taoyuan Branch

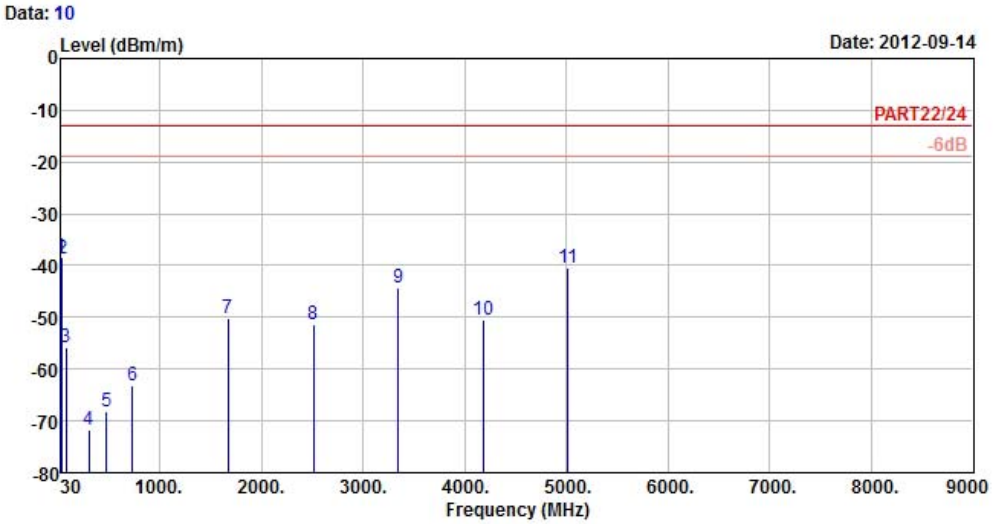

Site : 966 Chamber 5
Condition : PART22/24 3m EIRP_RSE_1G~19G_3 VERTICAL
Brand/Model: F-01E
Remark : Band V Link
Tested by : Kay Wu
Temprature : 25℃
Humidity : 65%
Plane : Z

	Freq	Level	Read Level	Limit Line	Over Limit	Factor	Remark
	MHz	dBm/m	dBm	dBm/m	dB	dB/m	
1 pp	33.78	-38.24	-36.40	-13.00	-25.24	-1.84	Peak
2	42.42	-38.68	-37.35	-13.00	-25.68	-1.33	Peak
3	74.55	-55.74	-45.98	-13.00	-42.74	-9.76	Peak
4	300.00	-71.86	-65.48	-13.00	-58.86	-6.38	Peak
5	474.30	-68.14	-64.39	-13.00	-55.14	-3.75	Peak
6	729.10	-63.05	-64.70	-13.00	-50.05	1.65	Peak
7	1672.80	-50.26	-37.44	-13.00	-37.26	-12.82	Peak
8	2509.20	-51.38	-42.21	-13.00	-38.38	-9.17	Peak
9	3345.60	-44.37	-36.56	-13.00	-31.37	-7.81	Peak
10	4182.00	-50.49	-44.91	-13.00	-37.49	-5.58	Peak
11	5018.40	-40.48	-38.76	-13.00	-27.48	-1.72	Peak

5 PHOTOGRAPHS OF THE TEST CONFIGURATION

Please refer to the attached file (Test Setup Photo).

6 INFORMATION ON THE TESTING LABORATORIES

We, Bureau Veritas Consumer Products Services (H.K.) Ltd., Taoyuan Branch, were founded in 1988 to provide our best service in EMC, Radio, Telecom and Safety consultation. Our laboratories are accredited and approved according to ISO/IEC 17025.

If you have any comments, please feel free to contact us at the following:

Linko EMC/RF Lab:
Tel: 886-2-26052180
Fax: 886-2-26051924

Hsin Chu EMC/RF Lab:
Tel: 886-3-5935343
Fax: 886-3-5935342

Hwa Ya EMC/RF/Safety/Telecom Lab:
Tel: 886-3-3183232
Fax: 886-3-3270892

Email: service.adt@tw.bureauveritas.com
Web Site: www.bureauveritas-adt.com

The address and road map of all our labs can be found in our web site also.

7 APPENDIX A – MODIFICATIONS RECORDERS FOR ENGINEERING CHANGES TO THE EUT BY THE LAB

No any modifications are made to the EUT by the lab during the test.

---END---