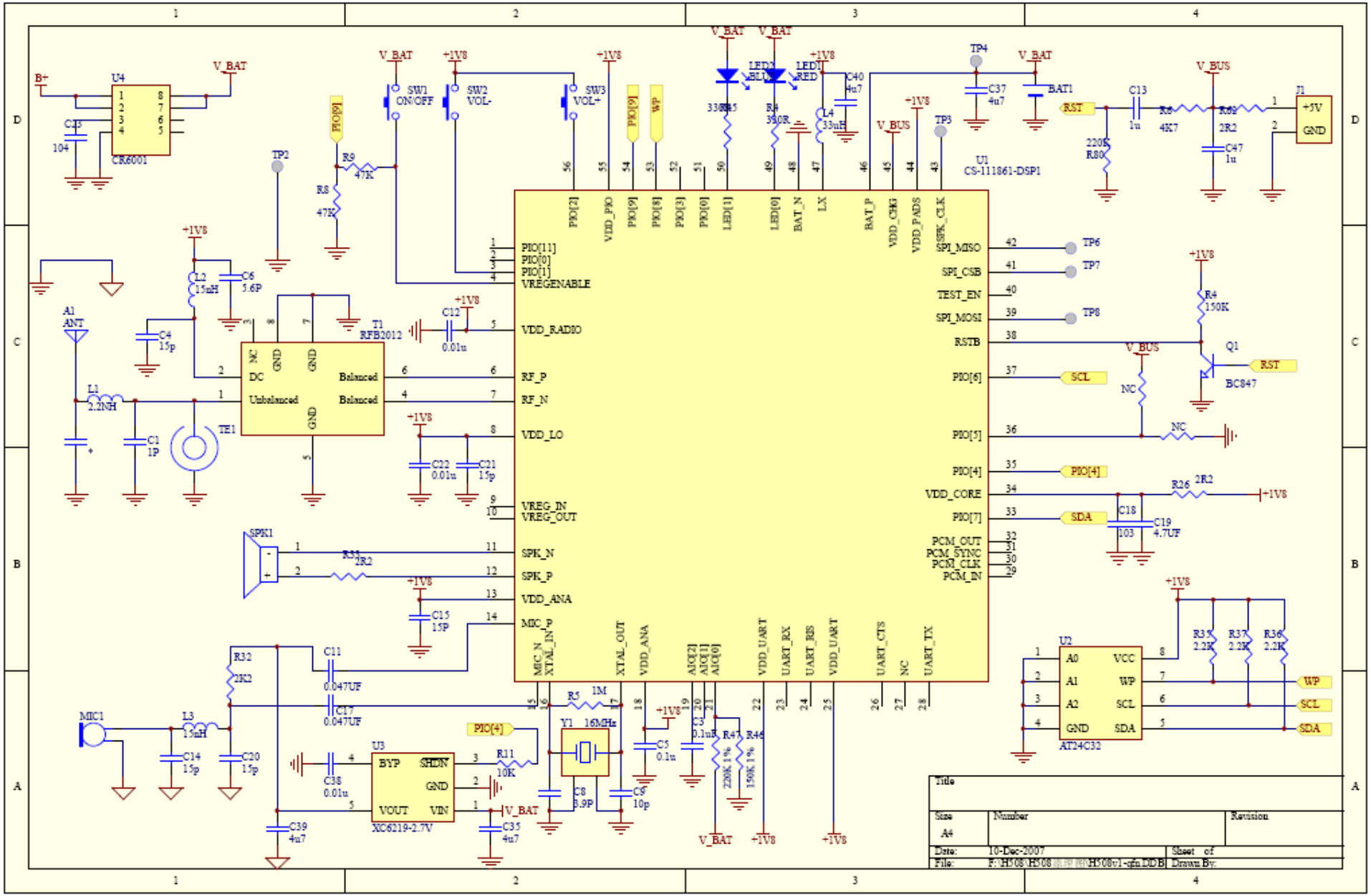
U1
CS-111861-DSP1
U4
CR6001
U2
AT24C32
U3
XC6219-2.7V
T1
RFB2012
Q1
BC847
J1
+5V
GND
SW1
ON/OFF
SW2
VOL-
SW3
VOL+
LED2
BLU
LED1
RED
BAT1
V_BAT
V_BUS
+1V8
B+
TP2
TP3
TP4
TP6
TP7
TP8
A1
ANT
TE1
SPK1
MIC1
Y1
16MHz
PIO[9]
WP
RST
SCL
SDA
PIO[4]
VREGENABLE
VDD_RADIO
RF_P
RF_N
VDD_LO
VREG_IN
VREG_OUT
SPK_N
SPK_P
VDD_ANA
MIC_P
MIC_N
XTAL_IN
XTAL_OUT
VDD_PIO
VDD_UART
UART_RX
UART_RTS
UART_CTS
UART_TX
SPI_MISO
SPI_CSB
TEST_EN
SPI_MOSI
RSTB
VDD_CORE
PCM_OUT
PCM_SYNC
PCM_CLK
PCM_IN
VDD_CHG
VDD_PADS
SPK_CLK
BAT_N
BAT_P
LX
LED[0]
LED[1]
PIO[2]
PIO[3]
PIO[8]
PIO[11]
PIO[0]
PIO[1]
PIO[5]
PIO[6]
PIO[7]
AIO[0]
AIO[1]
AIO[2]
NC
R4 150K
R26 2R2
R35 2.2K
R37 2.2K
R36 2.2K
R5 1M
R11 10K
R47 220K 1%
R46 150K 1%
C40 4u7
C37 4u7
C47 1u
C13 1u
C18 103
C19 4.7UF
C12 0.01u
C22 0.01u
C21 15p
C15 15P
C11 0.047UF
C17 0.047UF
C5 0.1u
C3 0.1uF
C8 3.9P
C9 10p
C35 4u7
C39 4u7
C38 0.01u
C14 15p
C20 15p
C4 15p
C1 1P
C6 5.6P
C25 104
L1 2.2NH
L2 15nH
L3 15nH
L4 33uH
R8 47K
R9 47K
R31 2R2
R32 2K2
R80 220K
R6 4K7
R62 2R2
Title
Size
A4
Number
Revision
Date: 10-Dec-2007
Sheet of
File: F:\H508\H508
Drawn By: