2402MHz

REVISION RECORD			
LTR	ECO NO:	APPROVED:	DATE:

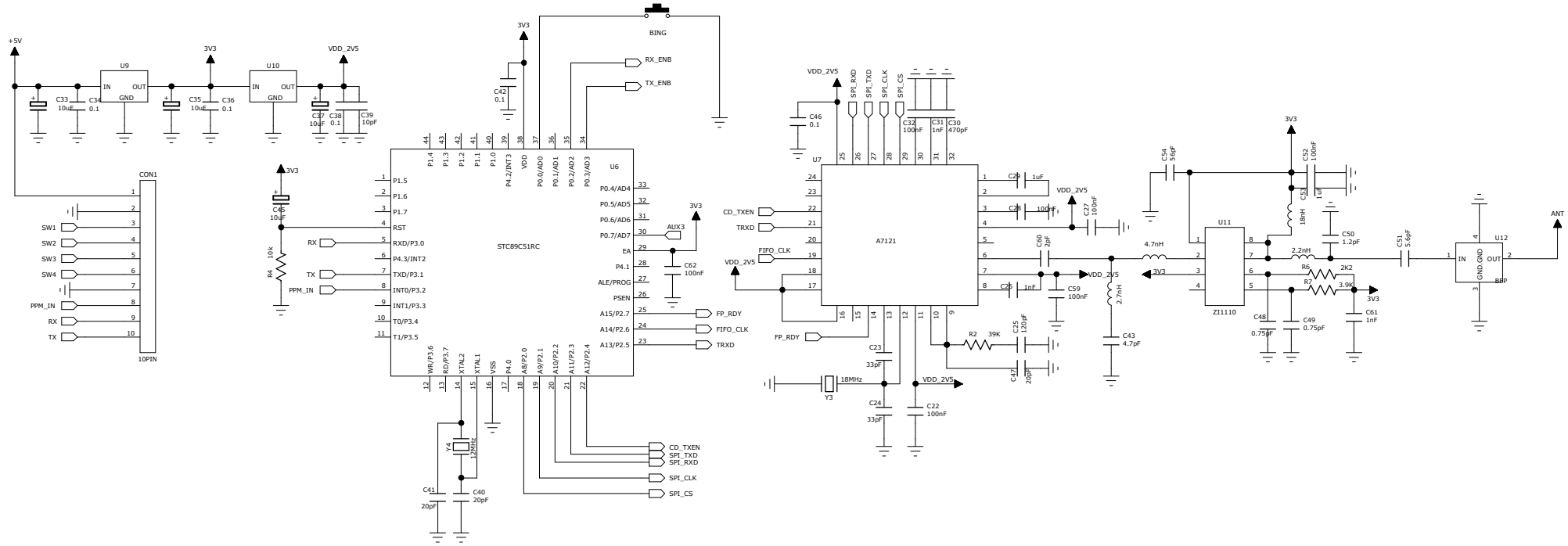

DRAWN: <Drawn By>	DATED: <Drawn Date>	COMPANY: <Company Name>		
CHECKED: <Checked By>	DATED: <Checked Date>	TITLE: <Title>		
QUALITY CONTROL: <QC By>	DATED: <QC Date>	CODE: <Code>	SIZE: A2	DRAWING NO: <Drawing Number> REV: <Revision>
RELEASED: <Released By>	DATED: <Release Date>	SCALE: <Scale>	SHEET: 1 OF 1	

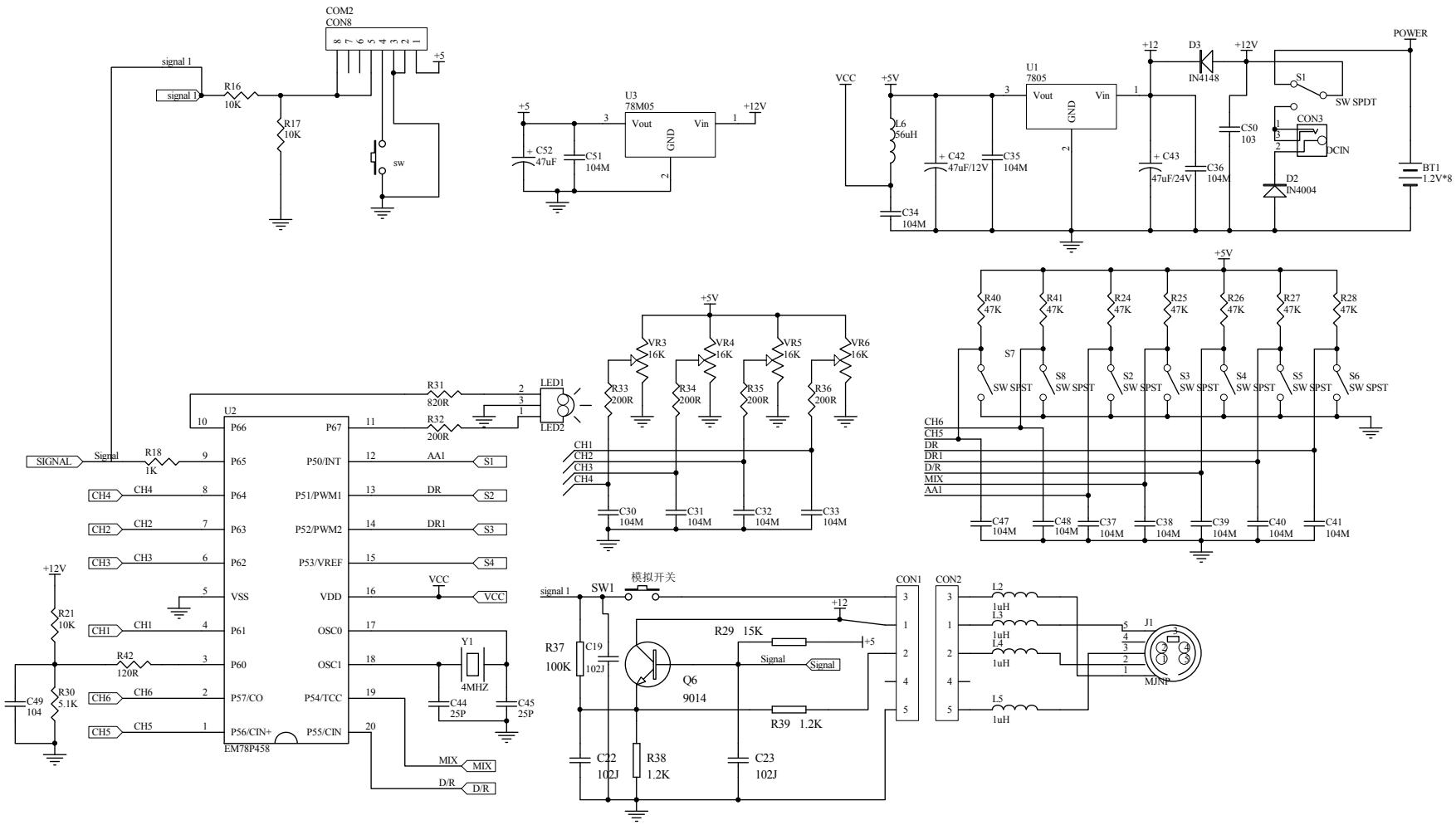

Title	FS-T424		
Size A3	Number		Revision 1.1
Date:	22-Oct-2007	Sheet of	
File:	E:\FS工程档\发射机\FS-472\SF-T472.ddb	Drawn By:	