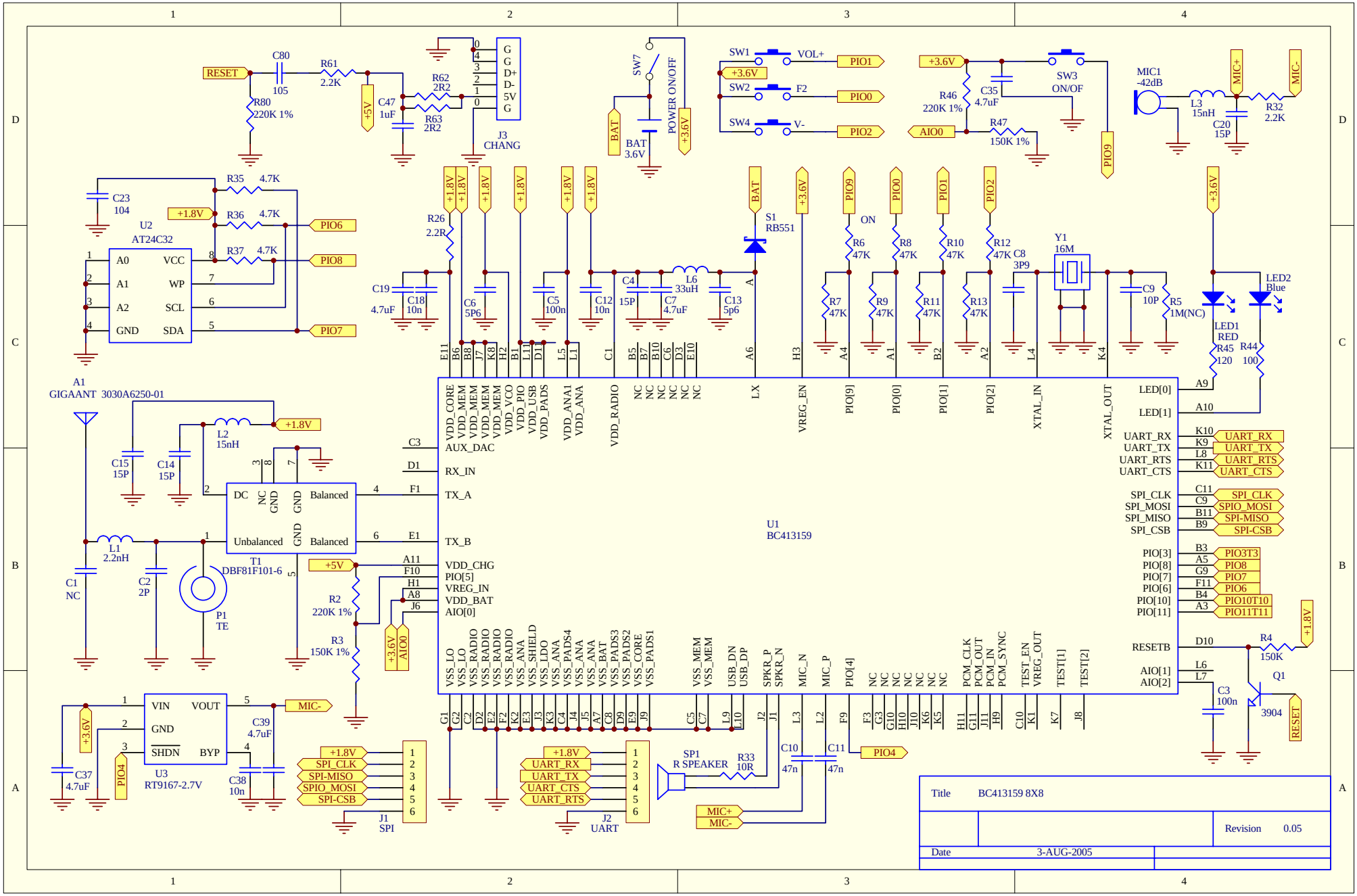
U1
BC413159
U2
AT24C32
U3
RT9167-2.7V
T1
DBF81F101-6
J1
SPI
J2
UART
J3
CHANG
A1
GIGAANT 3030A6250-01
SP1
R SPEAKER
S1
RB551
Y1
16M
LED1
RED
LED2
Blue
MIC1
-42dB
Q1
3904
POWER ON/OFF
Title
BC413159 8X8
Revision
0.05
Date
3-AUG-2005