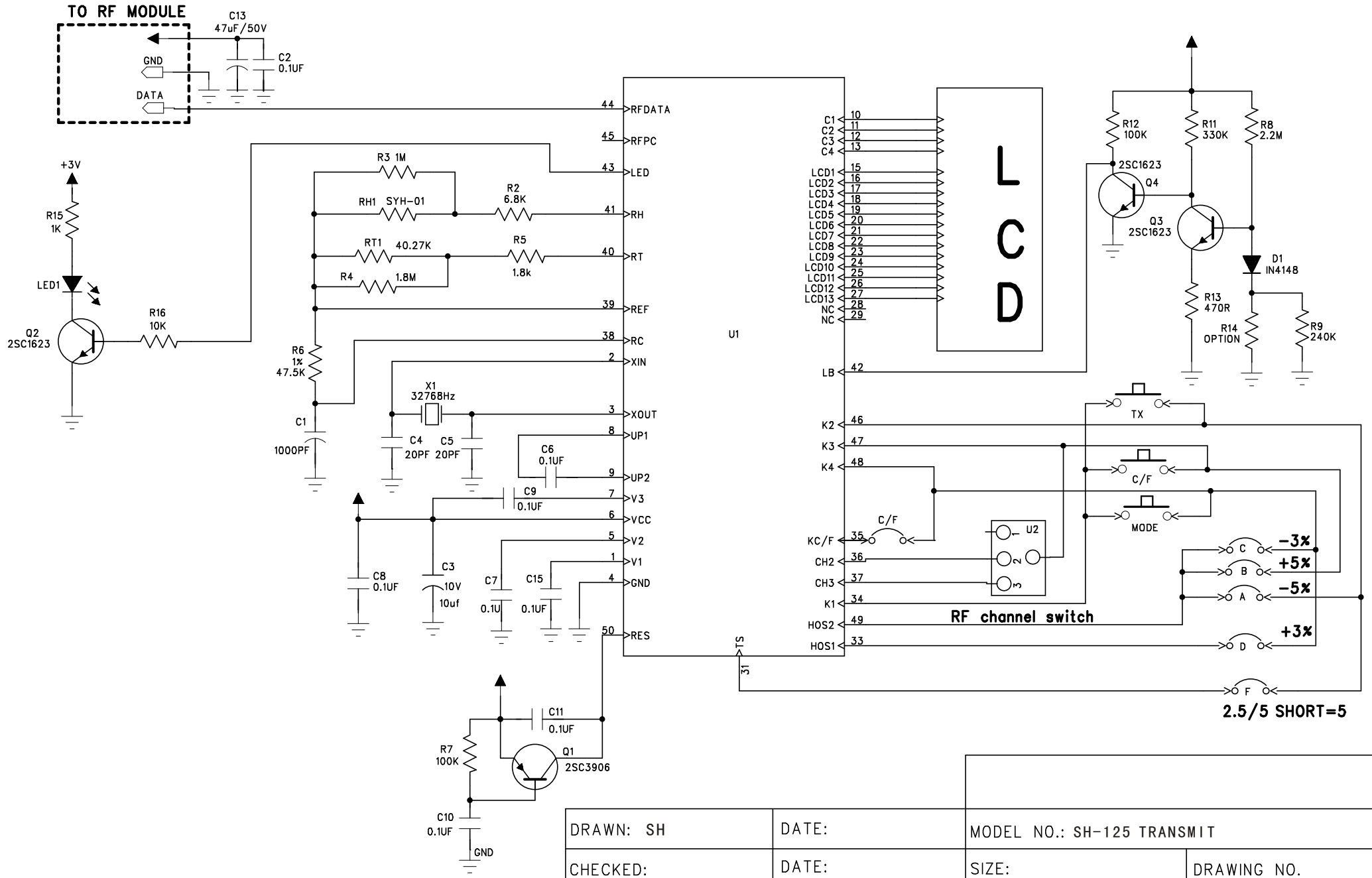

DRAWN: SH	DATE:	MODEL NO.: SH-125 TRANSMIT		
CHECKED:	DATE:	SIZE:	DRAWING NO.	
APPROVED:	DATE:	SCALE: 1 : 1	SHEET: OF	REV: 01