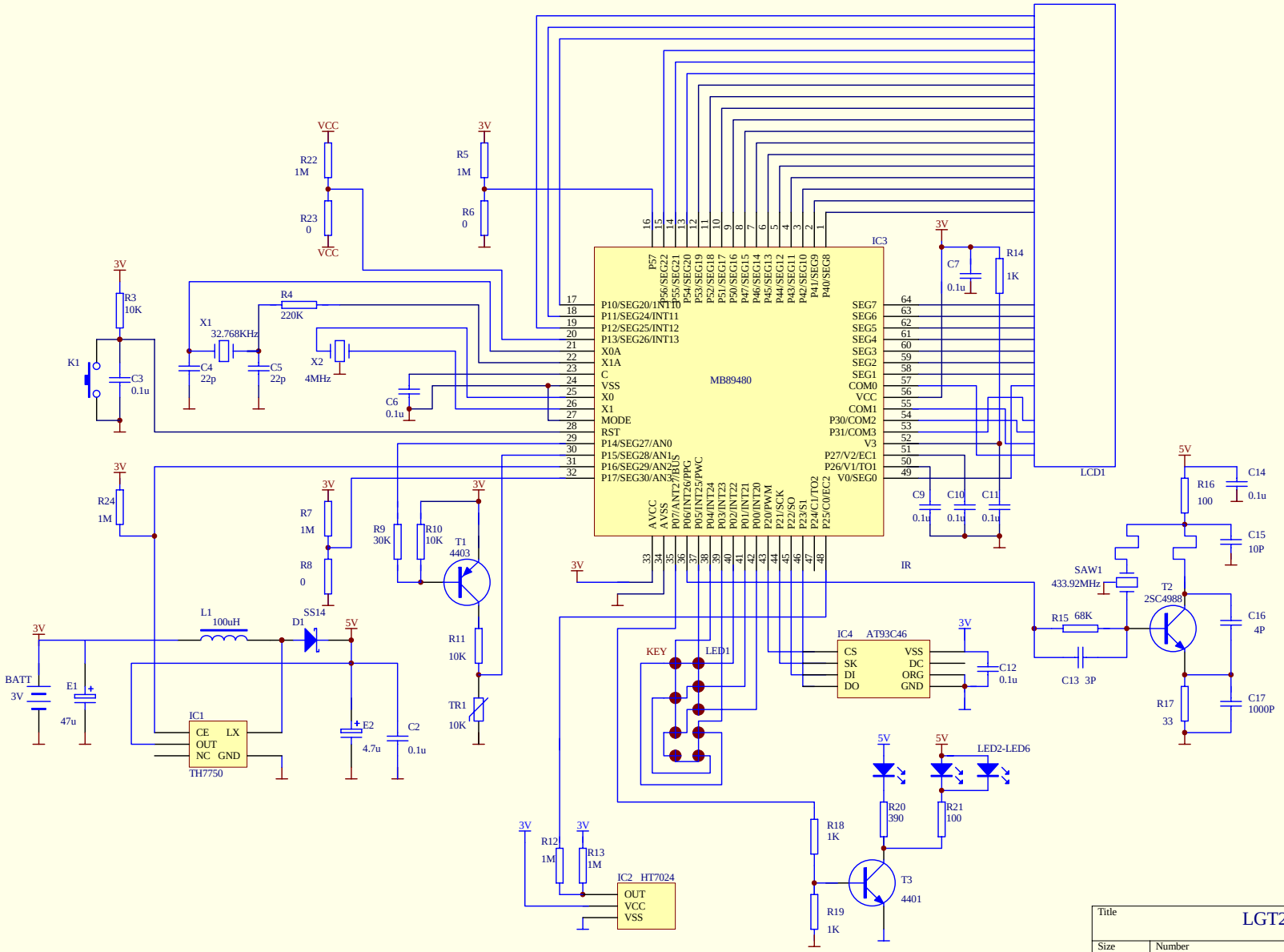

Title	LGT202TX_SCH	
Size B	Number	Revision
Date: 29-Aug-2007		Sheet of
File: D:\LRFGLT\PCB\LRFLT3.ddb		Drawn By: