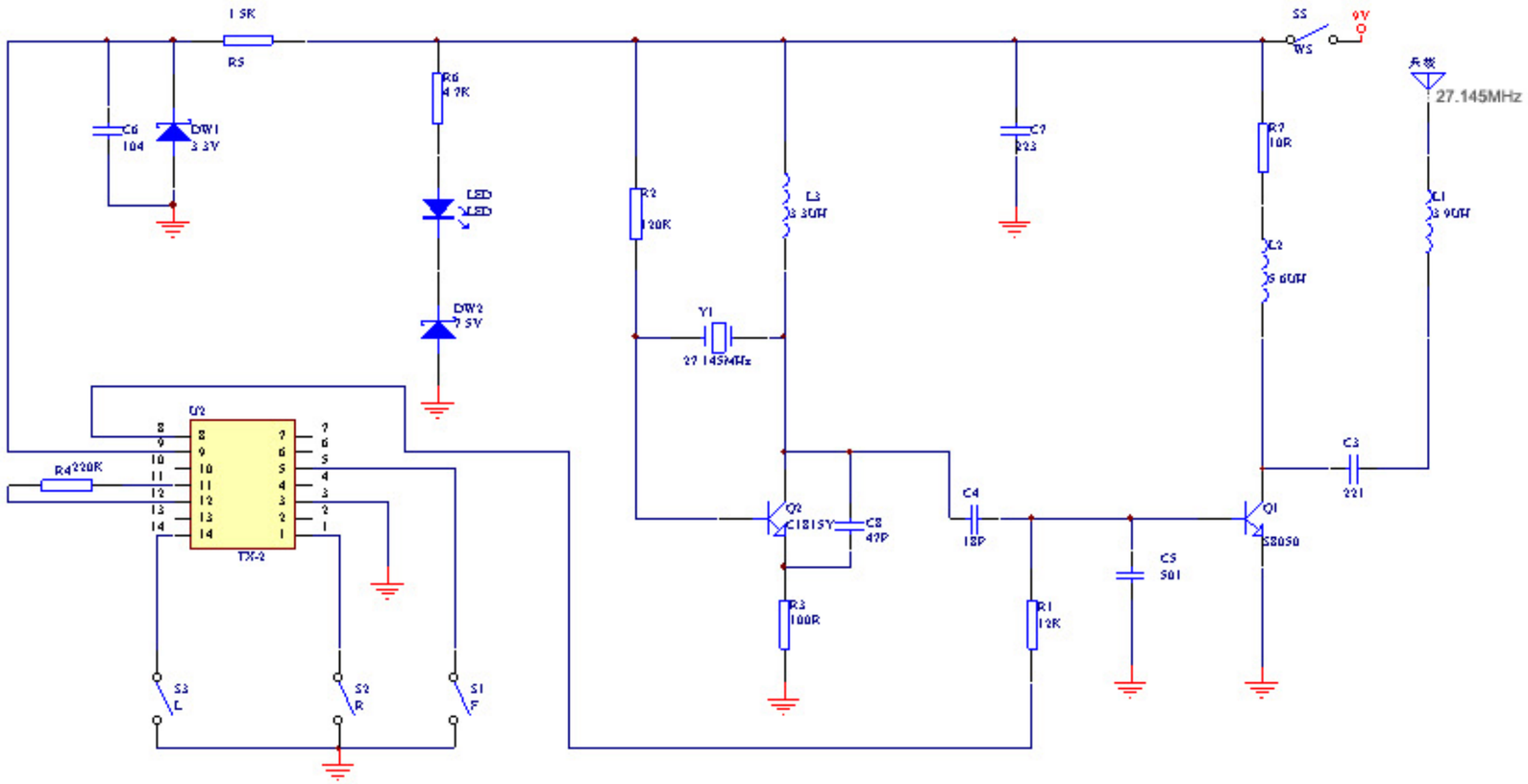


| | | |
|---|---|---|
| Title | 3T01C27MHz | |
| Size: B | Number | Revision |
| Date: 3-Sep-2007 | | Sheet of |
| File: [illegible].DDB | | Drawn By: |