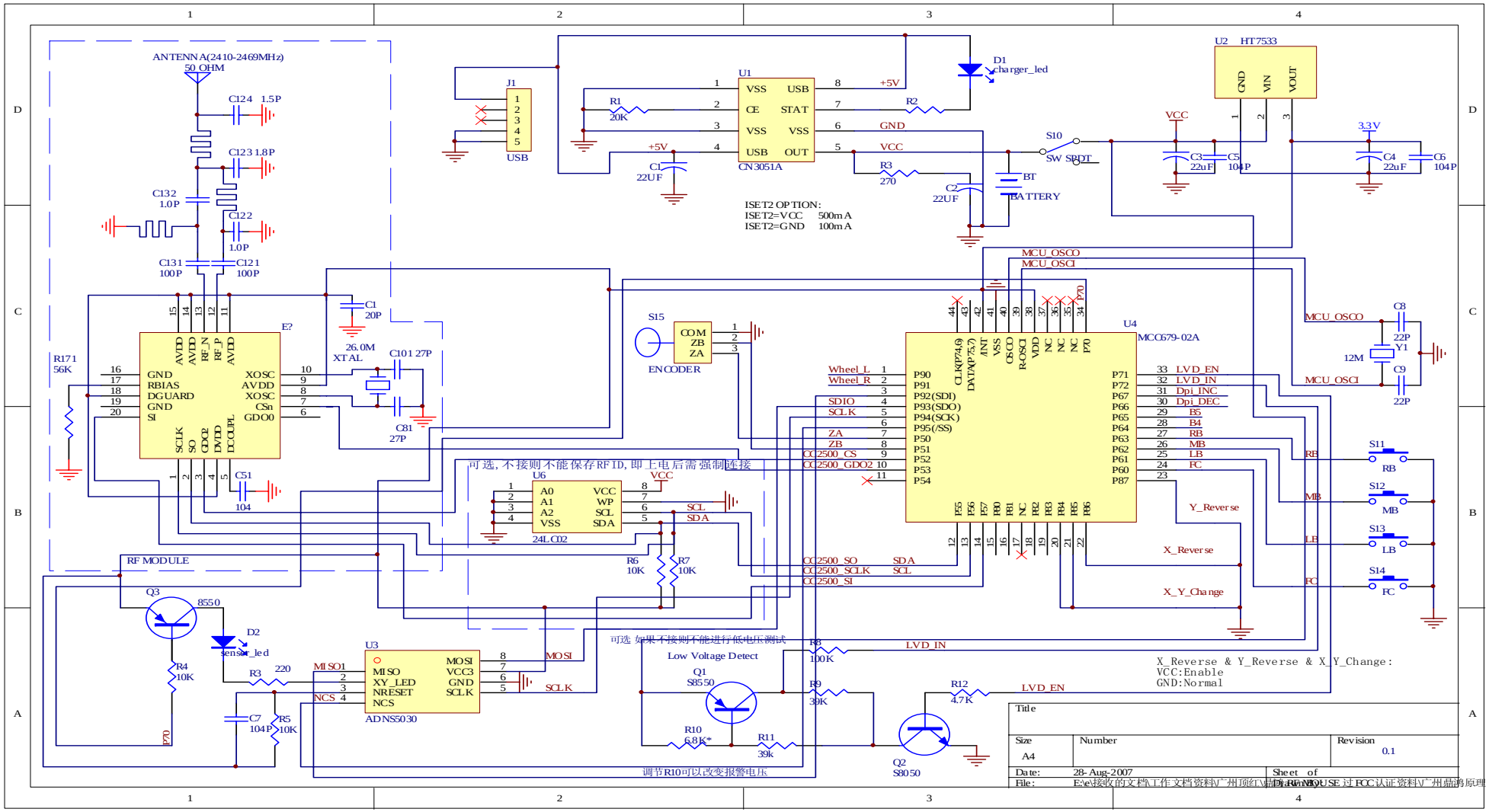
ANTENNA(2410-2469MHz)
50 OHM
C124 1.5P
C123 1.8P
C132 1.0P
C122 1.0P
C131 100P
C121 100P
E?
AVDD
RF_N
RF_P
GND
RBIAS
DGUARD
SI
XOSC
CSn
GDO0
SCLK
SO
GDO2
DVDD
DCOUPL
R171 56K
C1 20P
26.0M XTAL
C101 27P
C81 27P
C51 104
RF MODULE
J1
USB
U1
CN3051A
VSS
USB
CE
STAT
OUT
R1 20K
R2
R3 270
C1 22UF
C2 22UF
+5V
GND
VCC
D1 charger_led
S10
SW SPDT
BT
BATTERY
ISET2 OPTION:
ISET2=VCC 500mA
ISET2=GND 100mA
U2 HT7533
GND
VIN
VOUT
3.3V
C3 22uF
C5 104P
C4 22uF
C6 104P
S15
ENCODER
COM
ZB
ZA
U4
MCC679-02A
MCU_OSCO
MCU_OSCI
C8 22P
C9 22P
12M
Y1
Wheel_L
Wheel_R
SDIO
SCLK
ZA
ZB
CC2500_CS
CC2500_GDO2
CC2500_SO
CC2500_SCLK
CC2500_SI
LVD_EN
LVD_IN
Dpi_INC
Dpi_DEC
B5
B4
RB
MB
LB
FC
Y_Reverse
X_Reverse
X_Y_Change
S11 RB
S12 MB
S13 LB
S14 FC
U6
24LC02
A0
A1
A2
VSS
VCC
WP
SCL
SDA
R6 10K
R7 10K
可选，不接则不能保存RFID，即上电后需强制连接
Q3
8550
D2
sensor_led
R4 10K
R3 220
C7 104P
R5 10K
U3
ADNS5030
MISO
XY_LED
NRESET
NCS
MOSI
VCC3
GND
SCLK
MISO1
可选 如果不接则不能进行低电压测试
Low Voltage Detect
Q1
S8550
R8 100K
R9 39K
R10 6.8K*
R11 39k
R12 4.7K
Q2
S8050
调节R10可以改变报警电压
X_Reverse & Y_Reverse & X_Y_Change:
VCC:Enable
GND:Normal
Title
Size
A4
Number
Revision
0.1
Date: 28-Aug-2007
Sheet of
File: E:\e\接收的文档\工作文档资料\广州顶红\鼎鹏\DIAMOND USE过FCC认证资料\广州鼎鹏原理