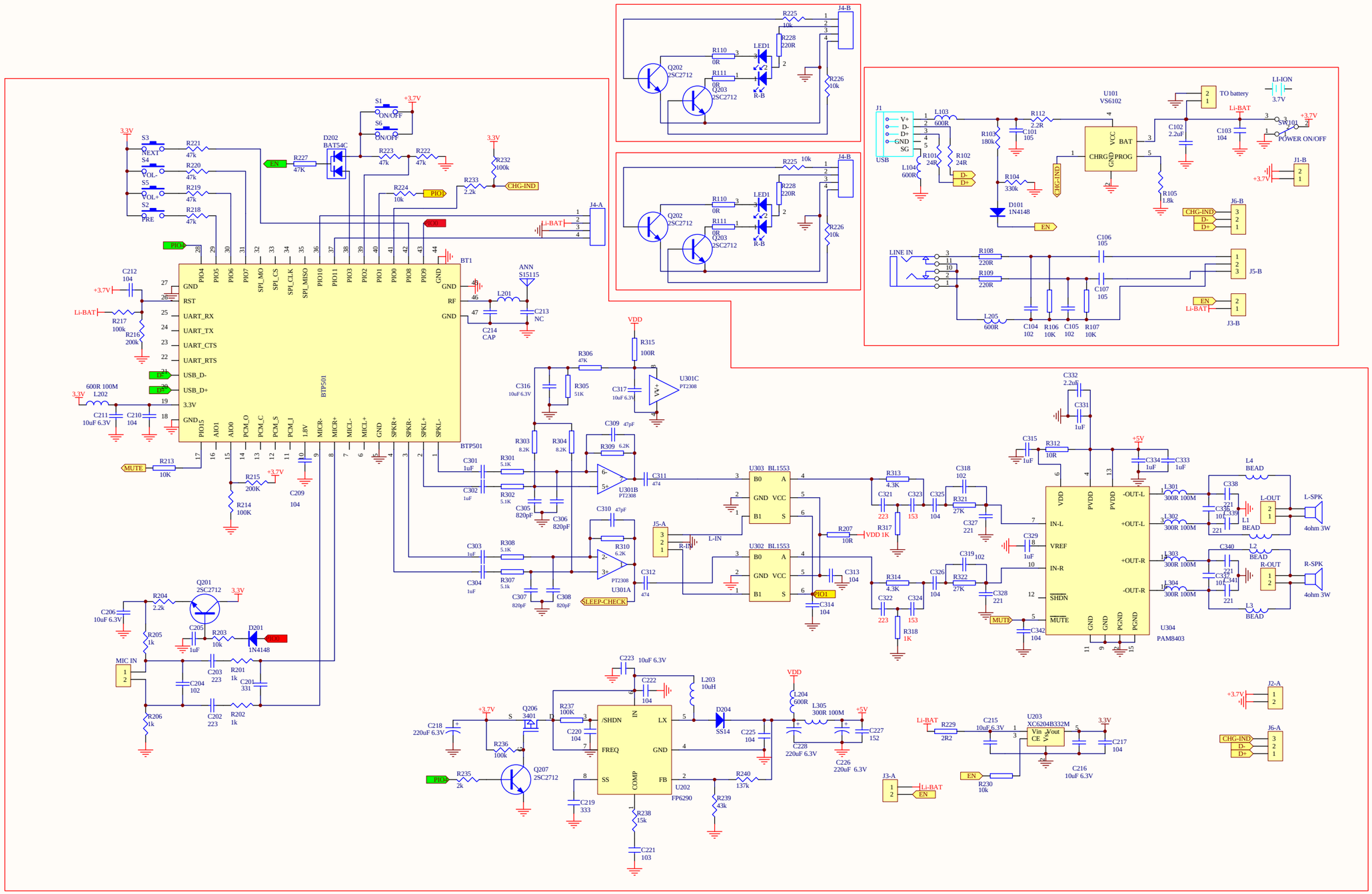

Title		
PF304 SCHEMATIC		
Size A2	Number	Revision
Date: 17-Sep-2011	Sheet of	
File: D:\project 20110425\Baby blue\sch pcb\Baby blue.DDB		