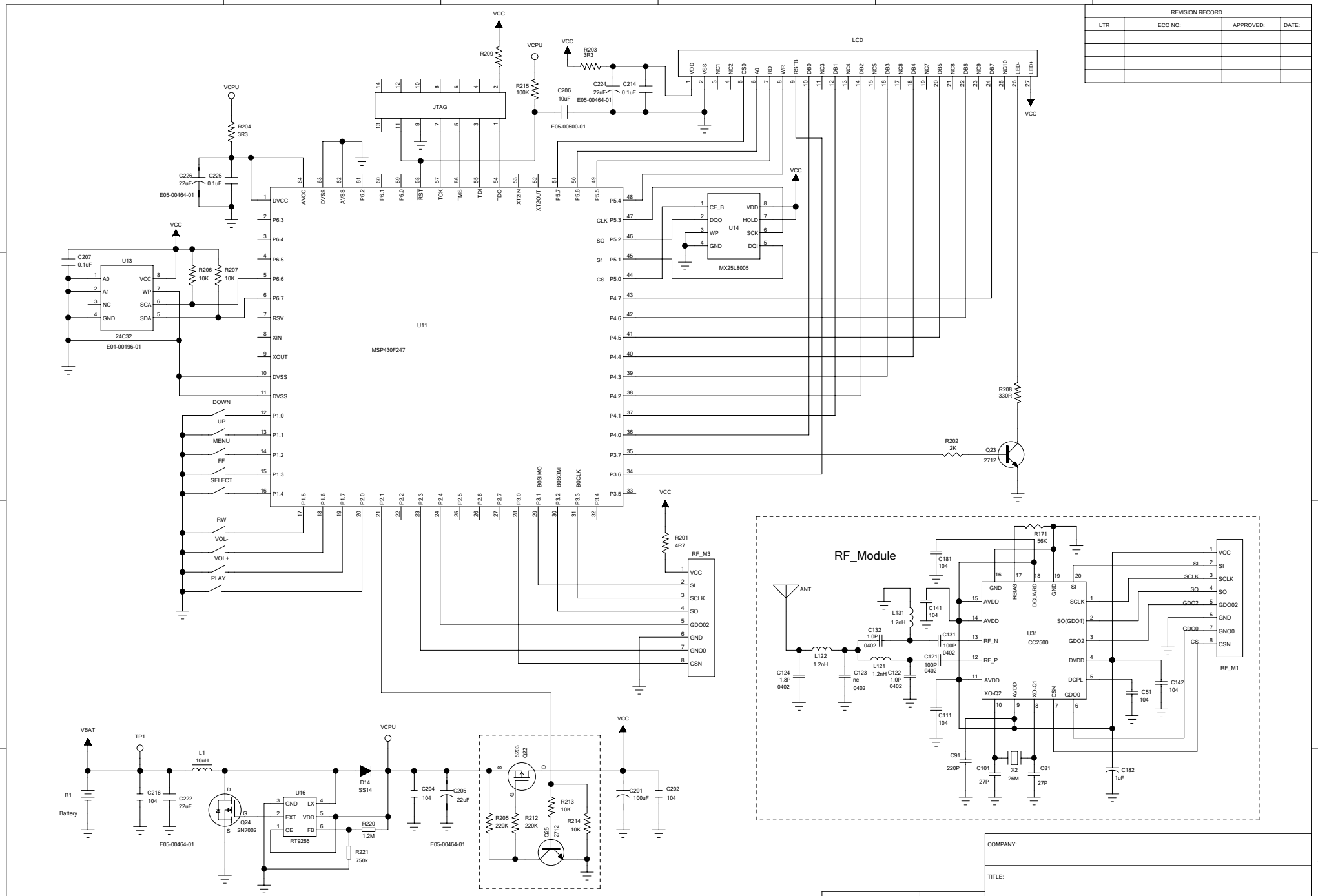
REVISION RECORD
LTR
ECO NO:
APPROVED:
DATE:
LCD
JTAG
U11
MSP430F247
U13
24C32
E01-00196-01
U14
MX25L8005
RF_M3
RF_Module
U31
CC2500
RF_M1
U16
RT9266
Battery
DOWN
UP
MENU
FF
SELECT
RW
VOL-
VOL+
PLAY
COMPANY:
TITLE:
DRAWN:
DATED:
CHECKED:
QUALITY CONTROL:
RELEASED:
CODE:
SIZE:
C
DRAWING NO:
REV:
SCALE:
SHEET: 1 OF 1