REVISION RECORD			
LTR	ECO NO:	APPROVED:	DATE:

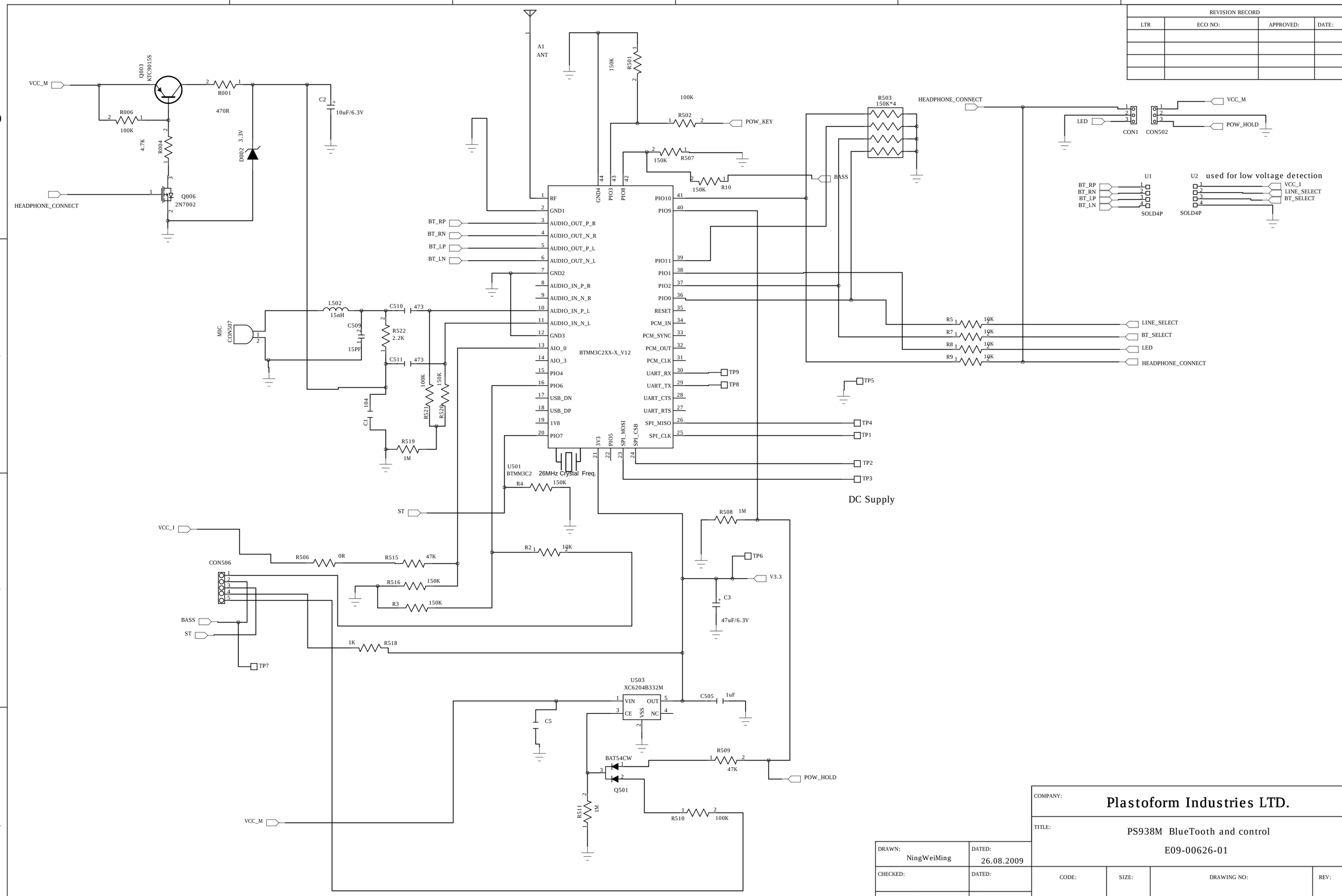

DRAWN: NingWeiMing	DATED: 26.08.2009	COMPANY: Plastoform Industries LTD.	
CHECKED:	DATED:	TITLE: PS938M BlueTooth and control E09-00626-01	
QUALITY CONTROL:	DATED:	CODE:	SIZE: / DRAWING NO: / REV: V1.5
RELEASED:	DATED:	SCALE:	SHEET: OF

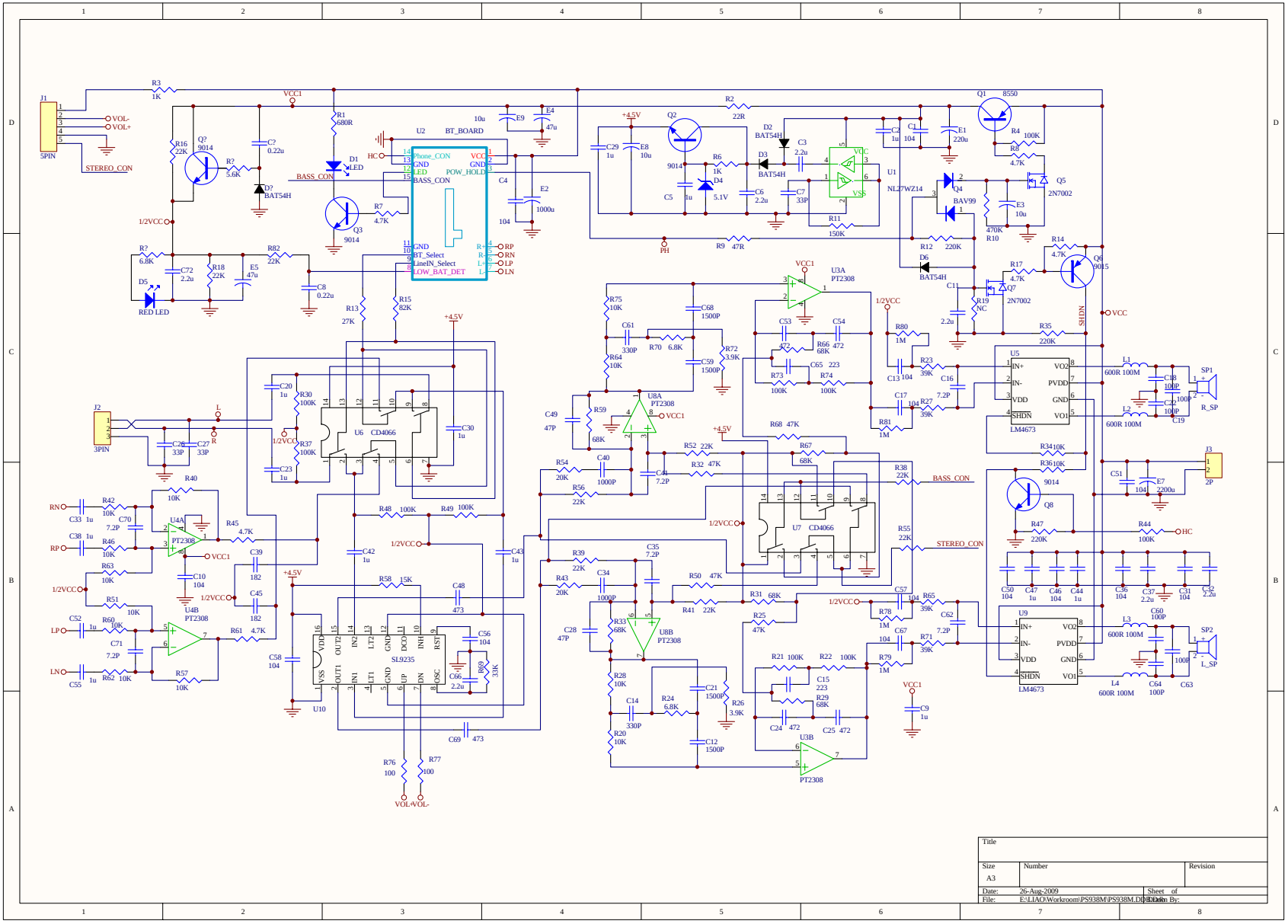

Title		
Size A3	Number	Revision
Date: 26-Aug-2009	Sheet of	
File: E:\LIAO\Workroom\PS938M\PS938M.Ddb	Drawn By:	

REVISION RECORD			
LTR	ECO NO:	APPROVED:	DATE:

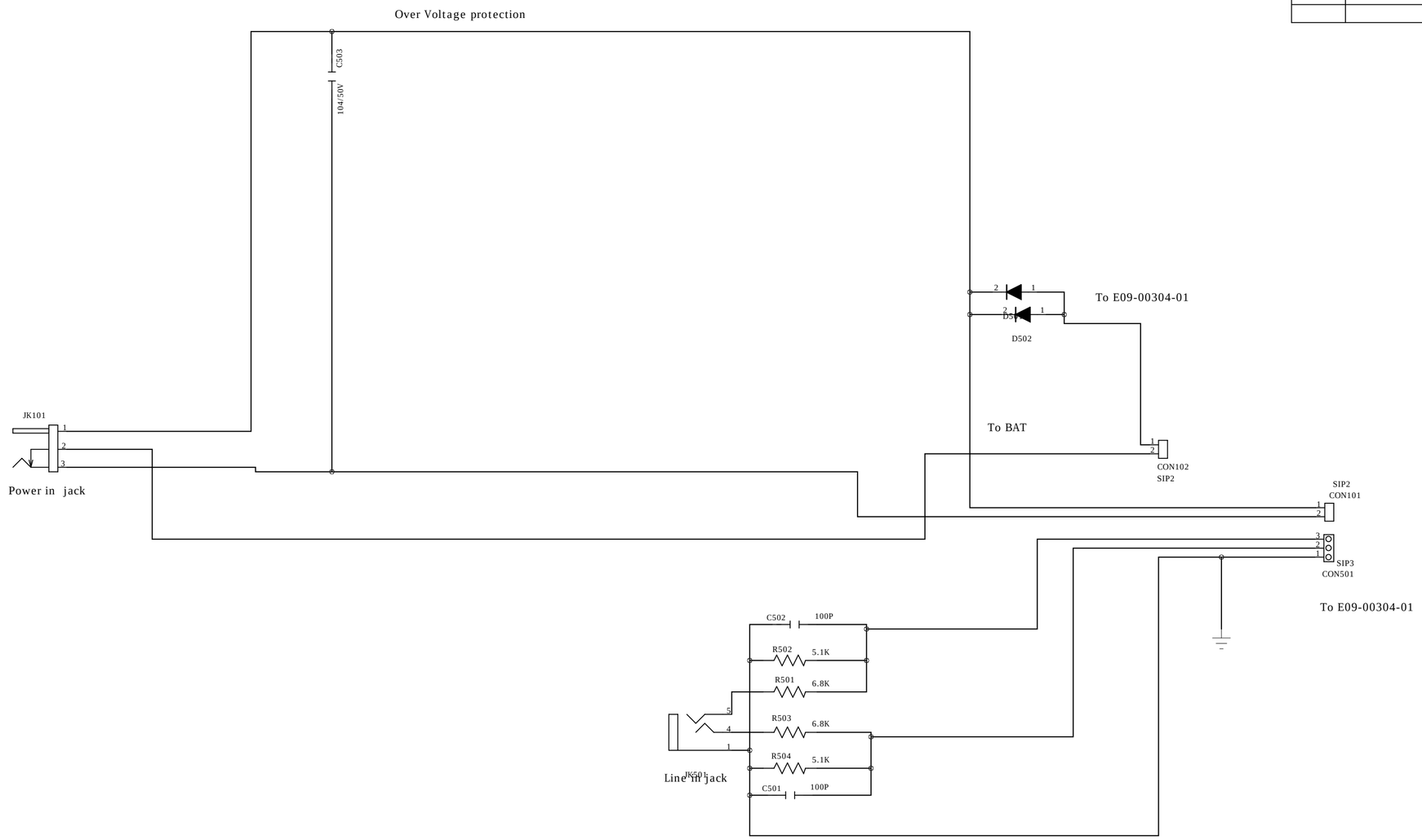

COMPANY: Plastoform Industries LTD.			
TITLE: PF301 Supply and Line In			
DRAWN: NingWeiMing	DATED: 05.06.2008	CODE:	SIZE:
CHECKED:	DATED:	DRAWING NO:	REV: V1.5
QUALITY CONTROL:	DATED:		
RELEASED:	DATED:	SCALE:	SHEET: OF

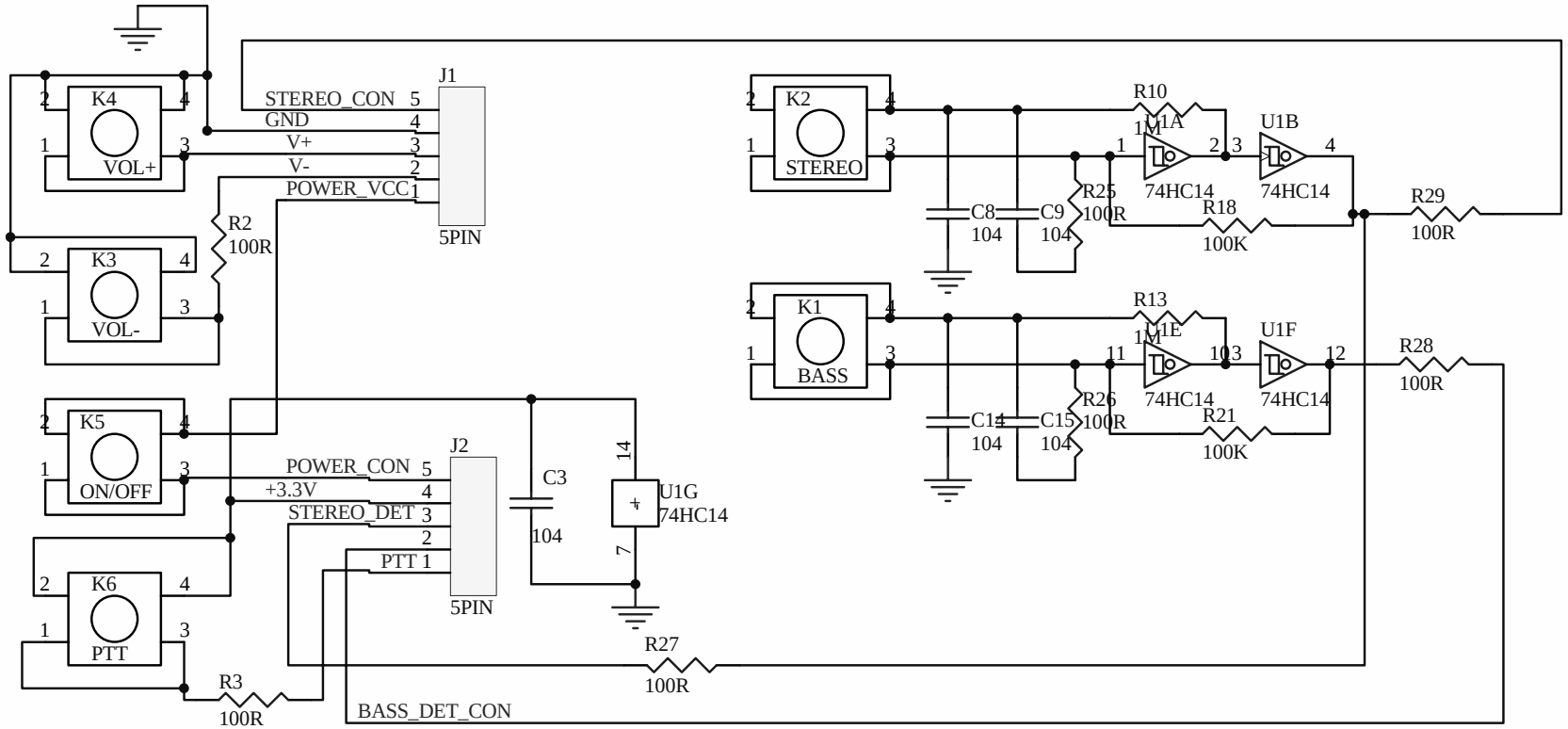

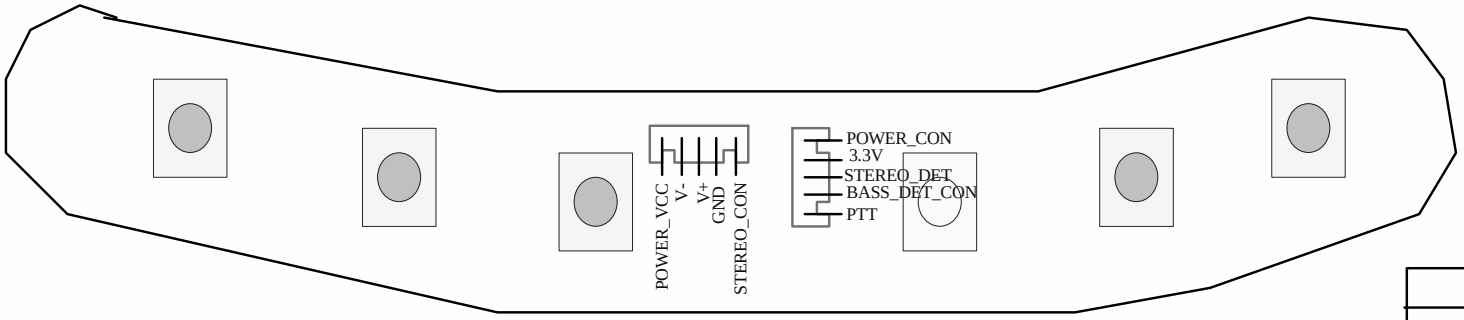

Plastoform Industries LTD.
PS938M E09-00624-01 Keyboard control
Drawing by: NingWeiming
Date: 2009.08.26