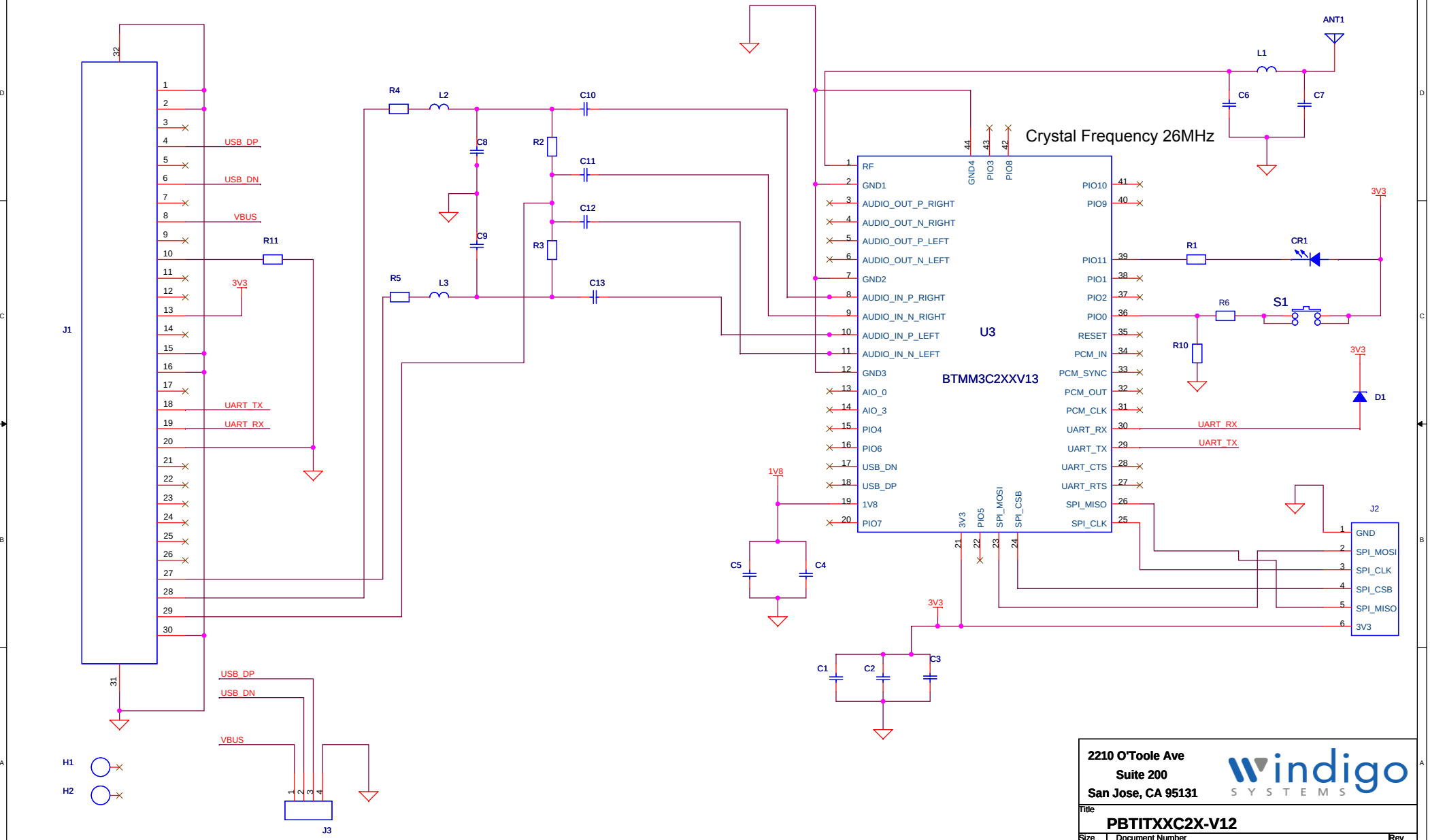

2210 O'Toole Ave
Suite 200
San Jose, CA 95131

windigo SYSTEMS

Title
PBTITXXC2X-V12

Size	Document Number	Rev
	PBTITXXC2X-V12	1.2

Date: Wednesday, October 17, 2007 Sheet 1 of 1