REVISION RECORD			
LTR	ECO NO:	APPROVED:	DATE:

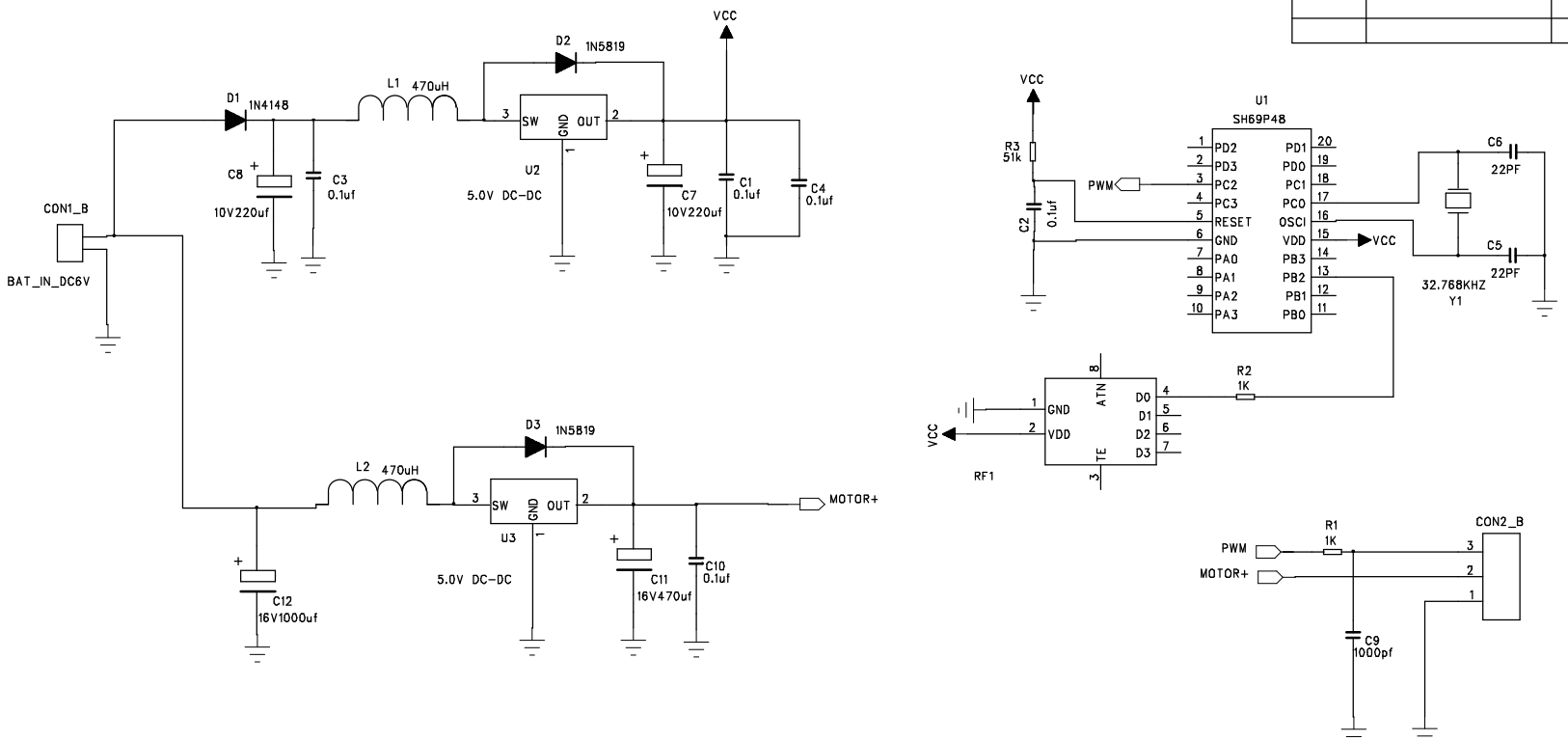

DRAWN: Arlun_He	DATED: 2007.7.23	COMPANY: ZHANGHONG COMPANY	
CHECKED:	DATED:	TITLE: ZH812_RX ELE. DWG.	
QUALITY CONTROL:	DATED:	CODE: / SIZE: / DRAWING NO: ZH81201	REV: R0
RELEASED:	DATED:	SCALE:	SHEET: OF