FCC LABEL & LABEL LOCATION

MODEL	RJ-2404
BRAND	VIZMONET
FCC ID	VJA-RJ2404
IC	7382A-RJ2404

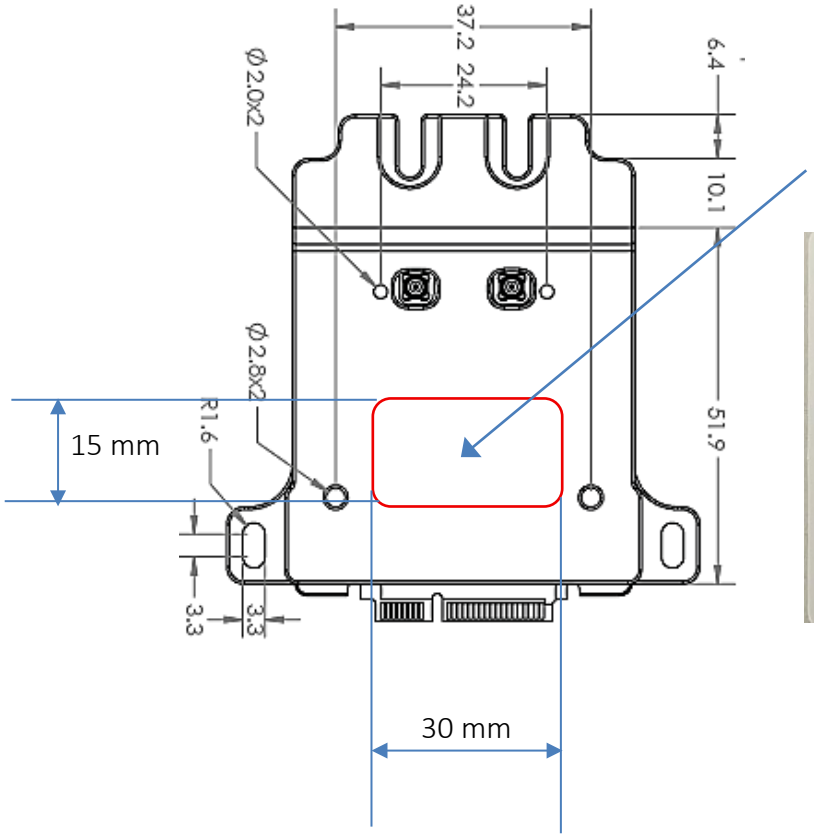

VIZMONET MODEL: RJ-2404
FCC ID: VJA-RJ2404 IC: 7382A-RJ2404