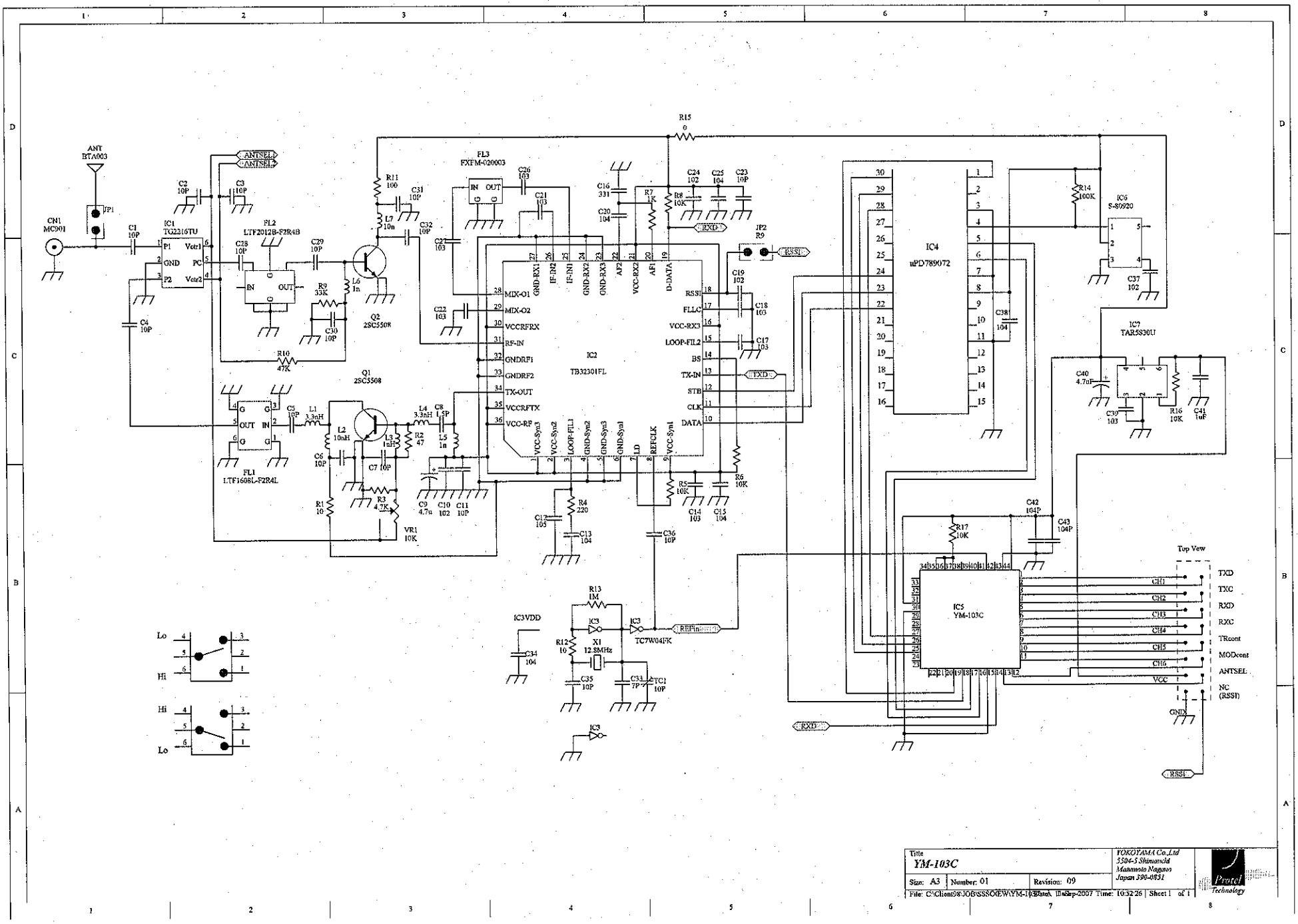

Title YM-103C			YOKOYAMA Co.,Ltd 3504-5 Shimoniki Matsumoto Nagano Japan 390-0851
Size: A3	Number: 01	Revision: 09	
File: C:\Client08\JOB\SSSOKE\YM-103.Sch	Date: 11-Sep-2007	Time: 10:32:26	Sheet 1 of 1

Protel Technology