SM102 BLOCK

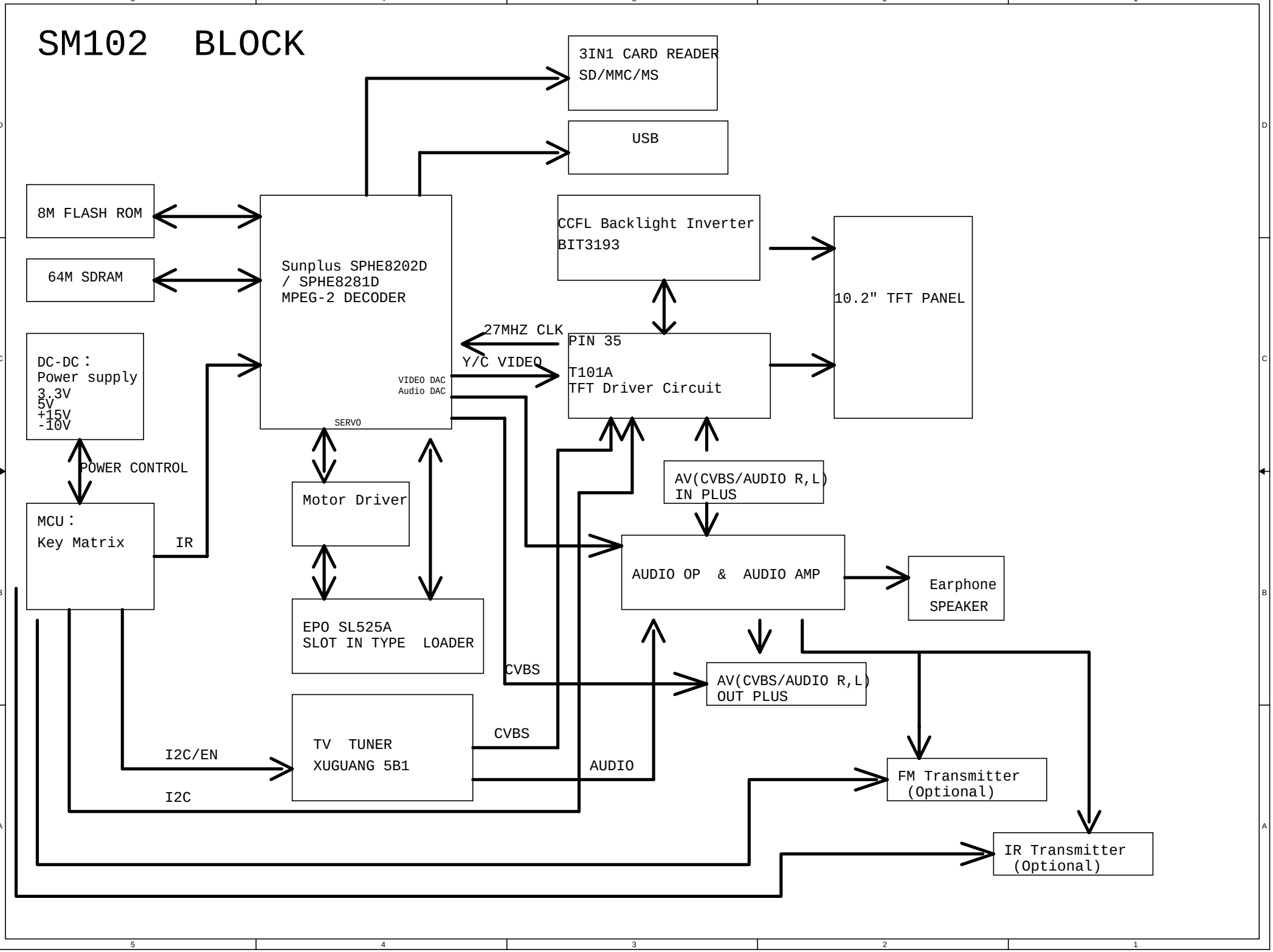
3IN1 CARD READER
SD/MMC/MS
USB
8M FLASH ROM
64M SDRAM
Sunplus SPHE8202D
/ SPHE8281D
MPEG-2 DECODER
VIDEO DAC
Audio DAC
SERVO
CCFL Backlight Inverter
BIT3193
10.2" TFT PANEL
27MHZ CLK
PIN 35
Y/C VIDEO
T101A
TFT Driver Circuit
DC-DC：
Power supply
3.3V
5V
+15V
-10V
POWER CONTROL
Motor Driver
AV(CVBS/AUDIO R,L)
IN PLUS
MCU：
Key Matrix
IR
AUDIO OP & AUDIO AMP
Earphone
SPEAKER
EPO SL525A
SLOT IN TYPE LOADER
CVBS
AV(CVBS/AUDIO R,L)
OUT PLUS
CVBS
TV TUNER
XUGUANG 5B1
I2C/EN
AUDIO
FM Transmitter
(Optional)
I2C
IR Transmitter
(Optional)