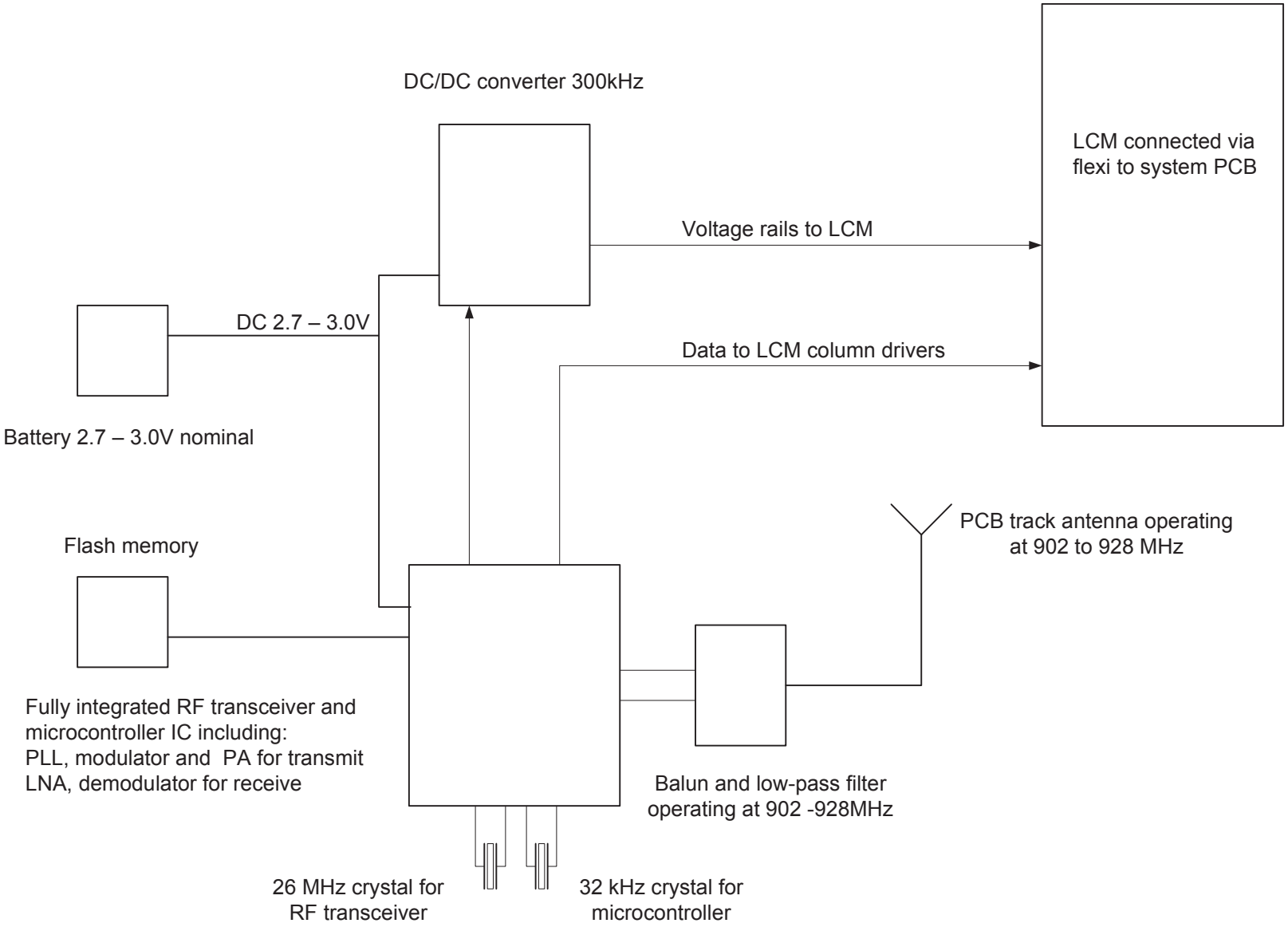EPOP 300 BLOCK DIAGRAM