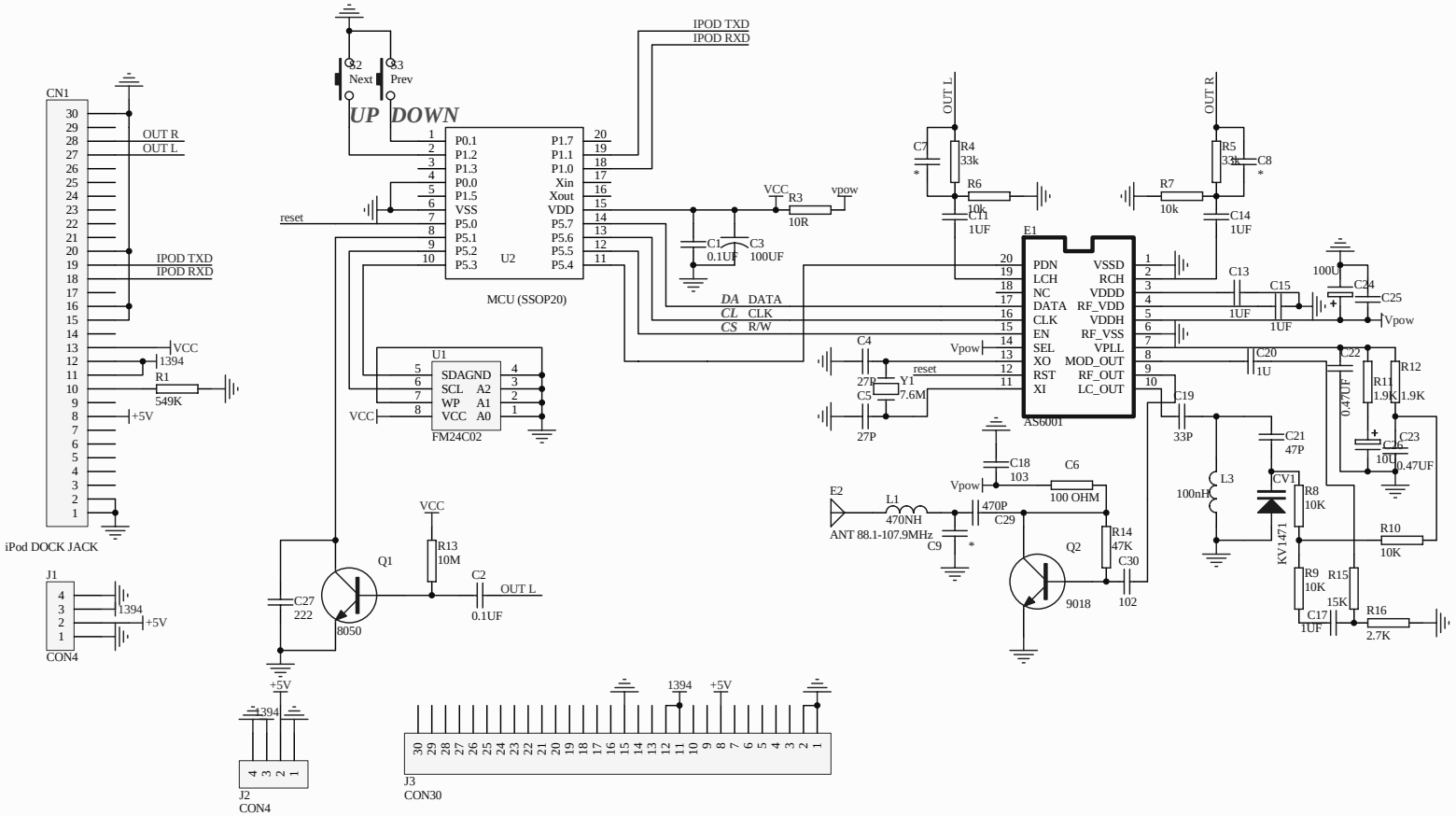

Title		
Size B	Number	Revision
Date: 2007-5-15	Sheet of	
File: D:\产品资料(PD-INFO)\..\FM TX IV.SCHDOC	Drawn By:	