TX SCHEMATIC FOR MODEL NO 62061- 27.145MHz

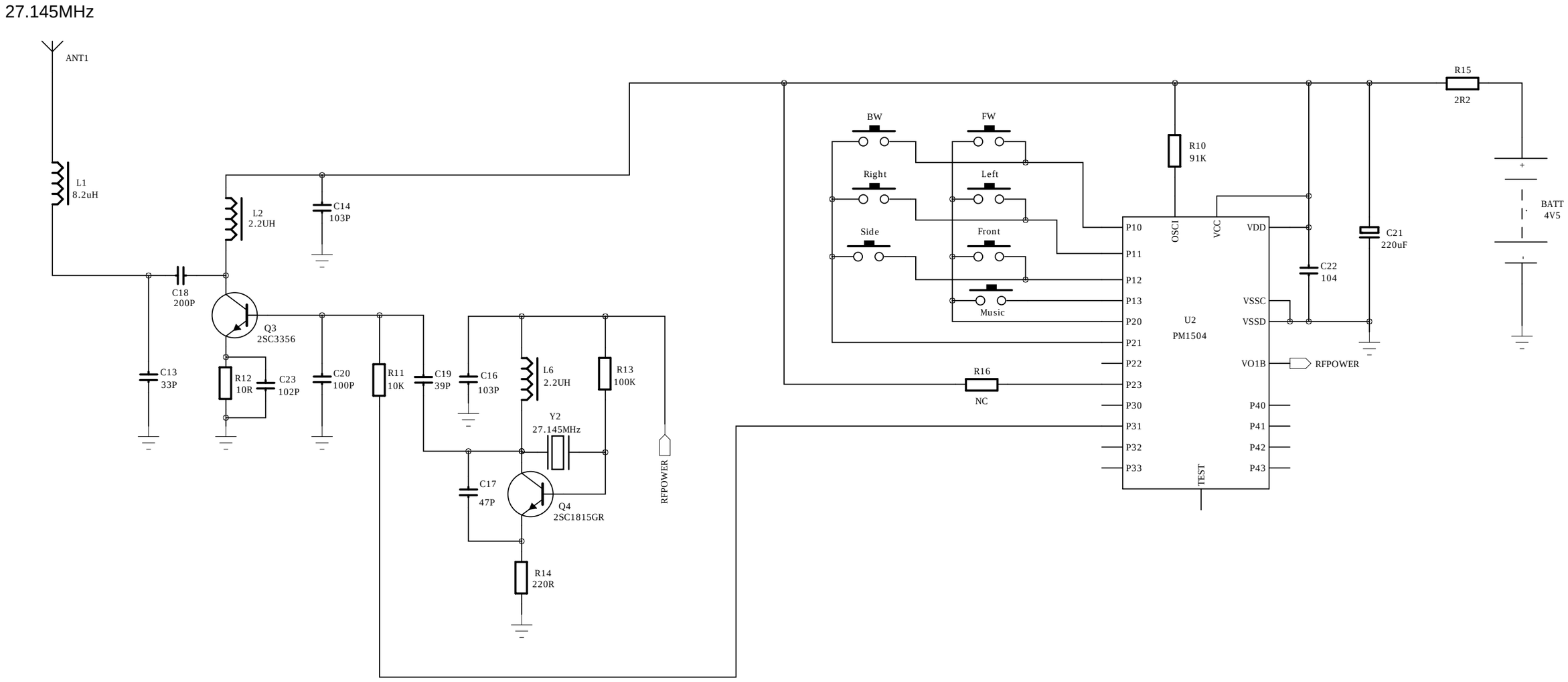

APPLICANT:-TOY STATE INDUSTRIAL LTD

MODEL NO:-62061

PAGE NO:- 1 OF 1

DRAWN BY: Zhou	DATED: 2012/4/28	COMPANY: TOY STATE INDUSTRIAL LTD		
CHECK BY: XIONG	DATED: 2012/4/28	MODEL: 62061 TX 27.145MHZ		
APP.BY: XIONG	DATED: 2012/4/28	REV: 1.0	DRAWING NO:	SHEET: 1 OF 1