MODEL NO:14300 RX

RX Schematic

PAGE NO:1 OF 1

APPLICANT: TOY STATE INDUSTRIAL LTD

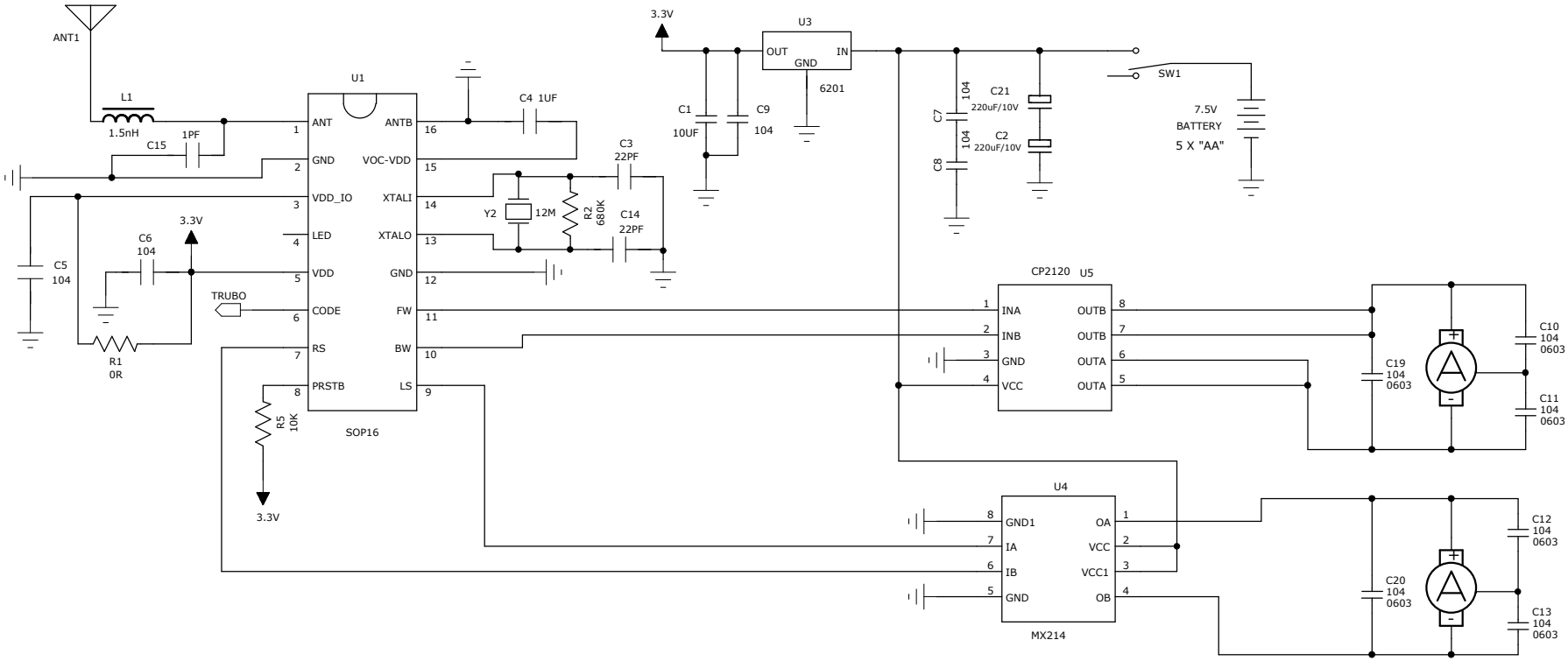

COMPANY: TOY STATE INDUSTRIAL LTD		
MODEL: 14300		
VER:		
DWN.	Tom	DATE: 2016.04.20
CHK.	wang	DATE: 2016.04.20
APP.	xiao	DATE: 2016.04.20