PDF created with pdfFactory Pro trial version www.pdffactory.com

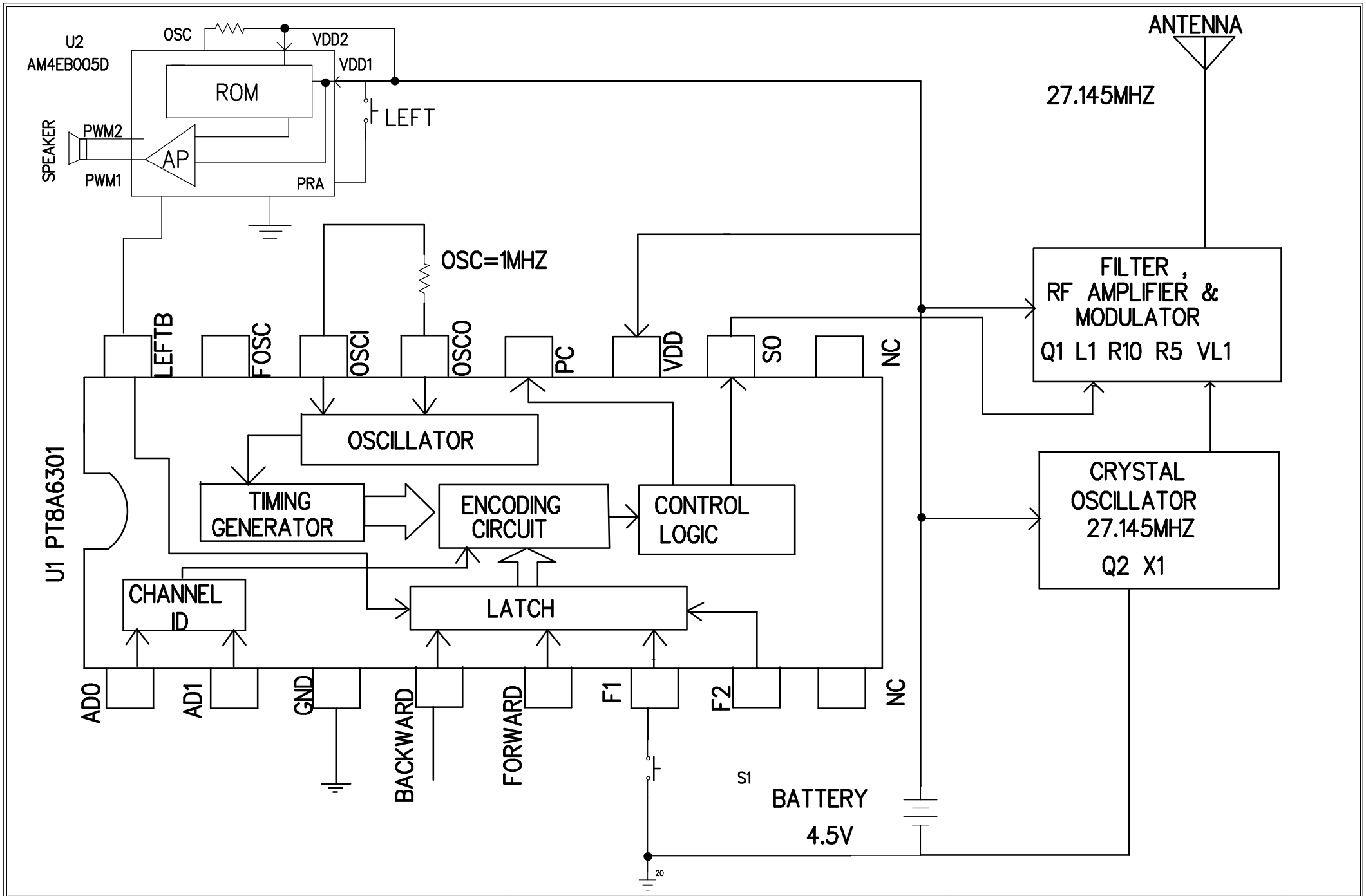

LUNG CHEONG	TITLE:	1800 TX 27MHZ BLOCK DIAGRAM	DESIGN BY:	DRAWING BY:	APPROVED BY:	SHEET:
	FUNCTION:		QW SHI	ZHANG S	QW SHI	1 of 1
	DWG NO:		200-08-13	2009-08-13	2009-08-13	