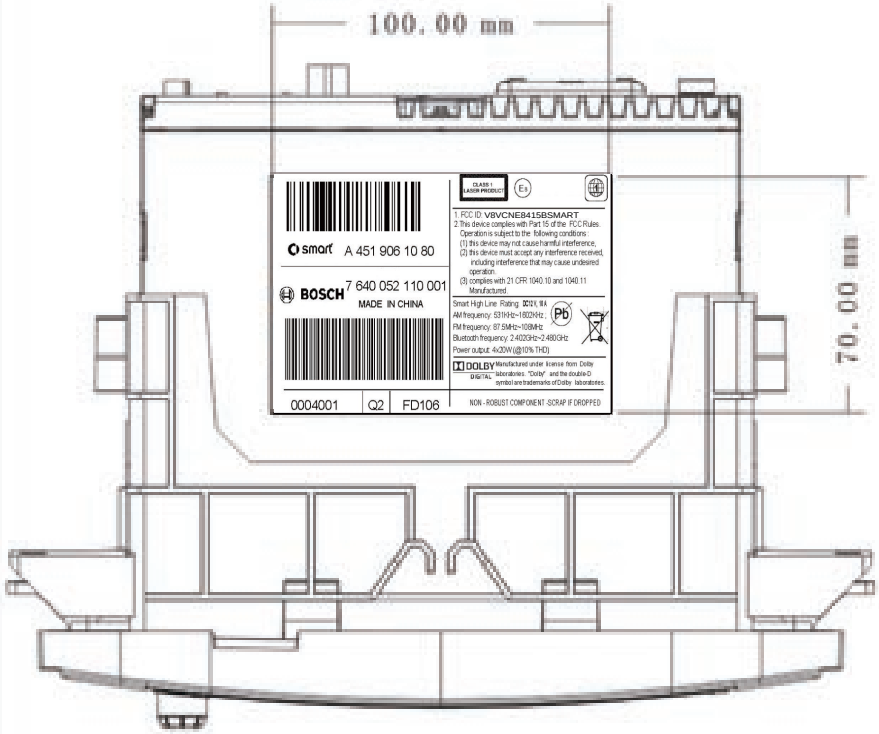
100.00 mm
70.00 mm
smart A 451 906 10 80
BOSCH 7 640 052 110 001
MADE IN CHINA
0004001 Q2 FD106
CLASS 1 LASER PRODUCT
1. FCC ID: V8VCNE8415BSMART
2.This device complies with Part 15 of the FCC Rules.
Operation is subject to the following conditions :
(1) this device may not cause harmful interference,
(2) this device must accept any interference received,
including interference that may cause undesired
operation.
(3) complies with 21 CFR 1040.10 and 1040.11
Manufactured.
Smart High Line Rating: 3Ø24, 9A
AM frequency: 531KHz~1802KHz ;
FM frequency: 87.5MHz~108MHz;
Bluetooth frequency: 2.402GHz~2.480GHz
Power output: 4x20W (@10% THD)
DOLBY Manufactured under license from Dolby
DIGITAL Laboratories. "Dolby" and the double-D
symbol are trademarks of Dolby laboratories.
NON - ROBUST COMPONENT -SCRAP IF DROPPED

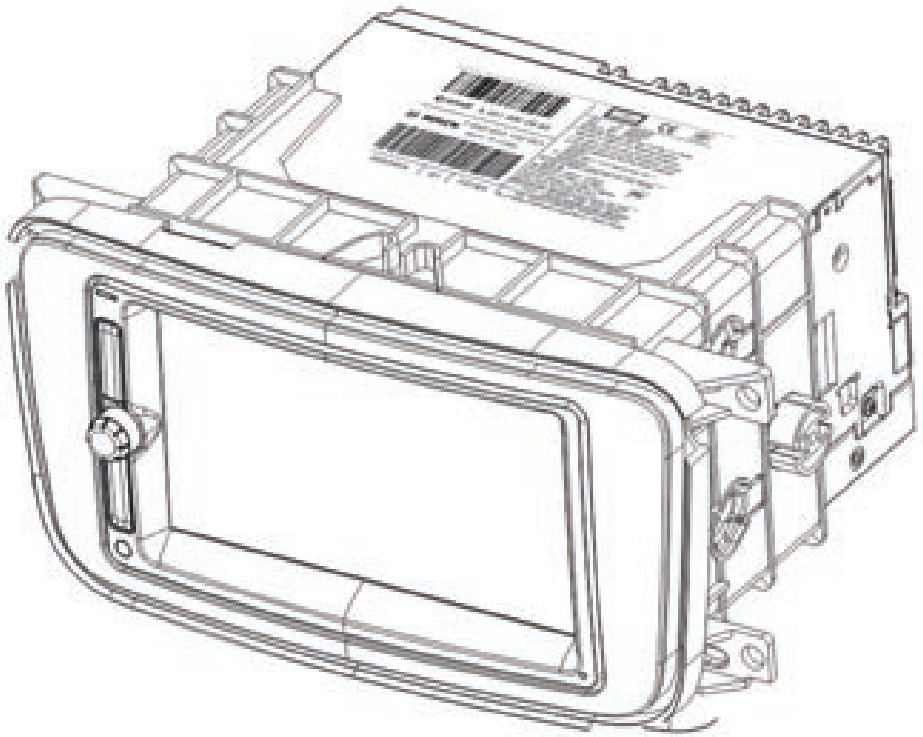

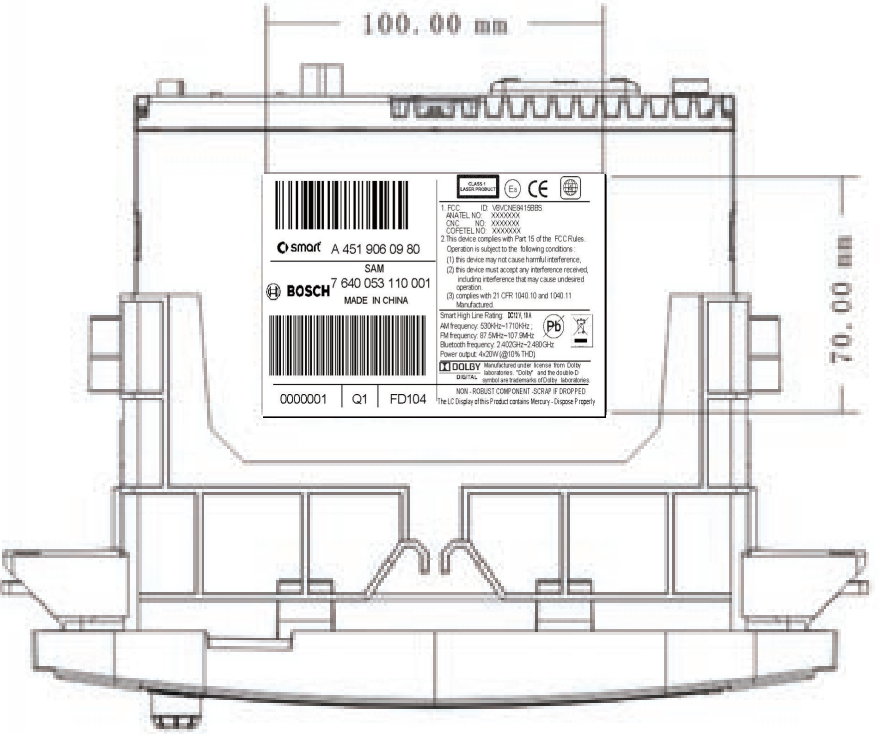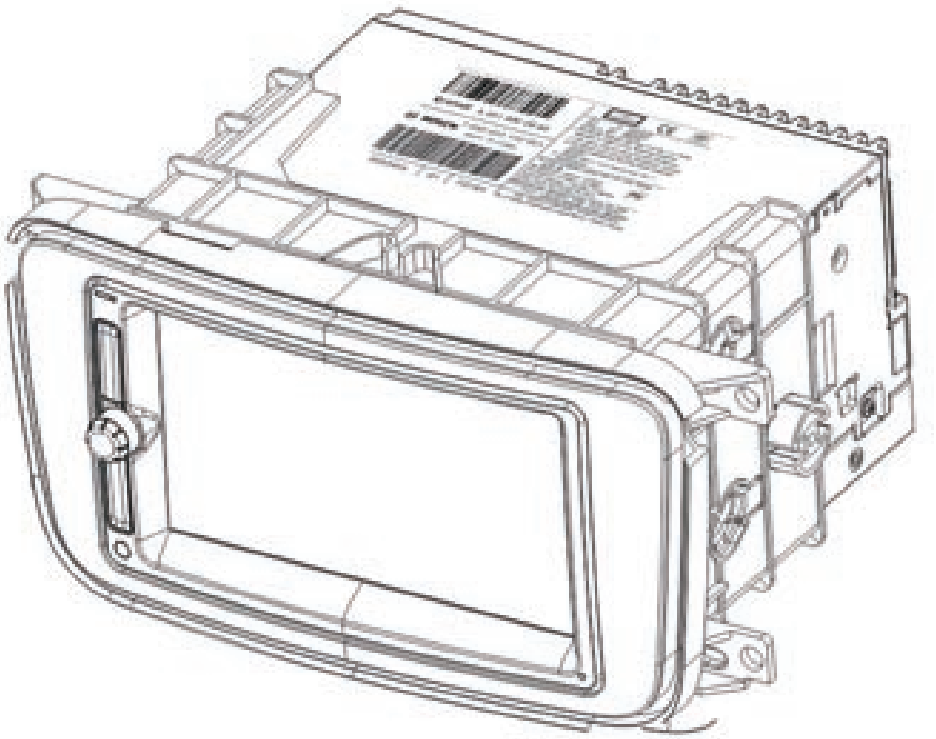
100.00 mm
70.00 mm
smart A 451 906 09 80
SAM
BOSCH 7 640 053 110 001
MADE IN CHINA
0000001 Q1 FD104
CLASS I LASER PRODUCT
1. FCC ID: VBVCNE9415BBS
ANATEL NO: XXXXXXX
CNC NO: XXXXXXX
COFETEL NO: XXXXXXX
2. This device complies with Part 15 of the FCC Rules.
Operation is subject to the following conditions:
(1) this device may not cause harmful interference,
(2) this device must accept any interference received, including interference that may cause undesired operation.
(3) complies with 21 CFR 1040.10 and 1040.11
Manufactured:
Smart High Line Rating: IC191, IM
AM frequency: 530KHz~1710KHz;
FM frequency: 87.5MHz~107.9MHz
Bluetooth frequency: 2.402GHz~2.480GHz
Power output: 4x20W (@10% THD)
Pb
DOLBY DIGITAL
Manufactured under license from Dolby laboratories. "Dolby" and the double-D symbol are trademarks of Dolby laboratories
NON - ROBUST COMPONENT - SCRAP IF DROPPED
The LC Display of this Product contains Mercury - Dispose Properly