PCB Layout：

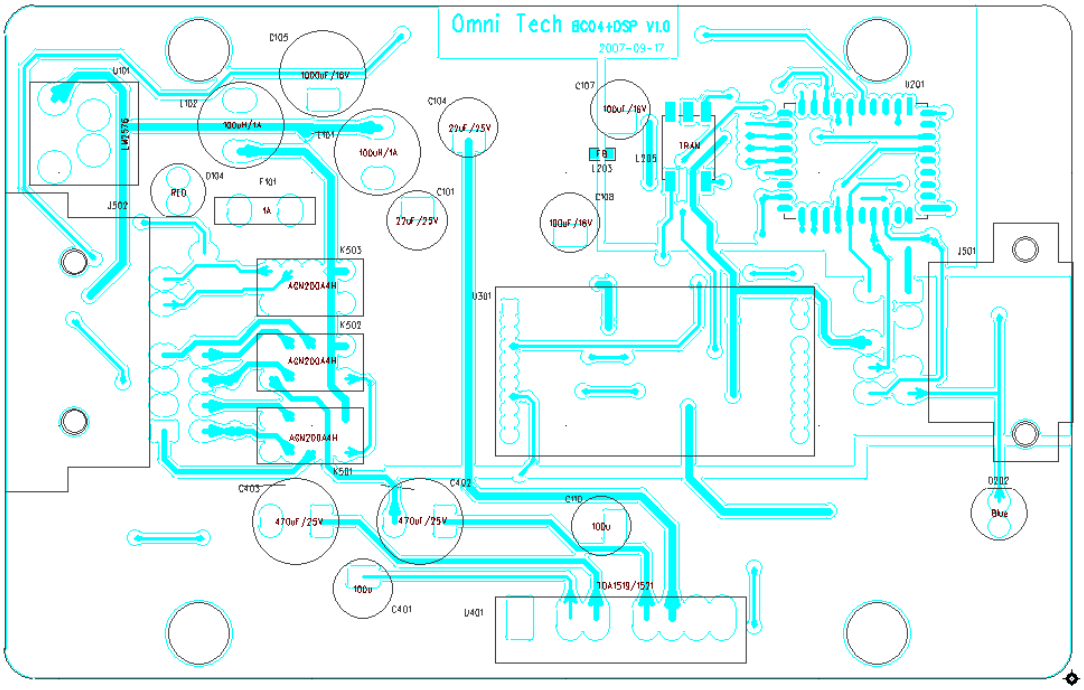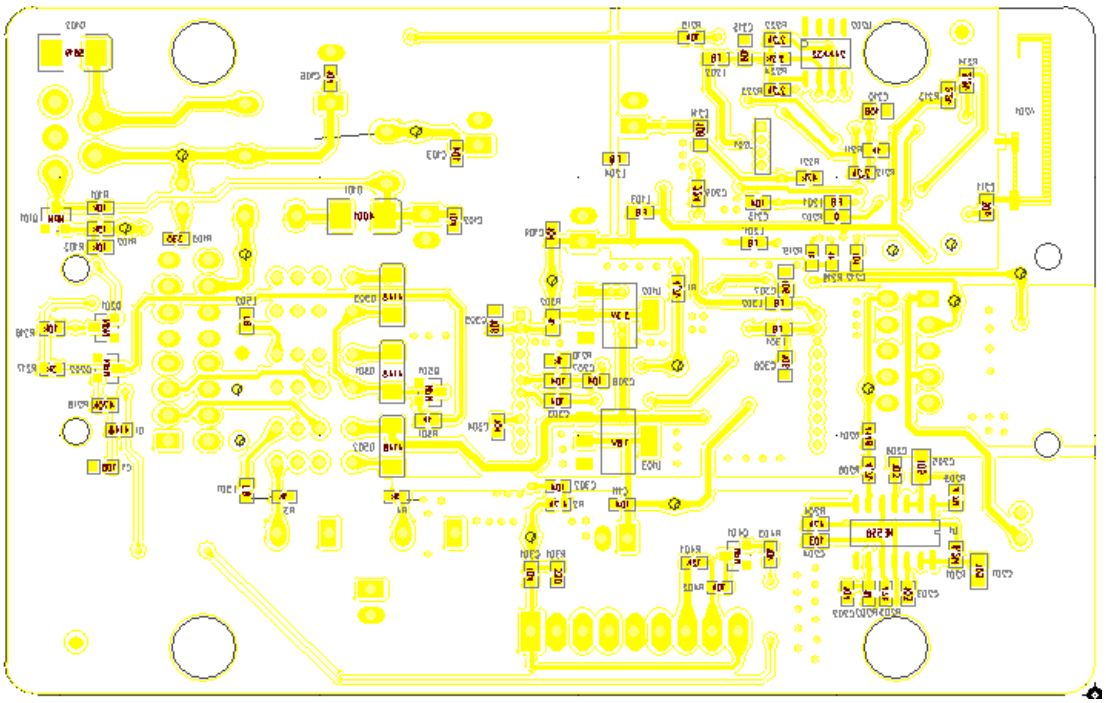
Omni Tech BC04+DSP V1.0
2007-09-17
C105
1000uF/16V
U101
L102
100uH/1A
L101
100uH/1A
C104
220uF/25V
C107
100uF/16V
U201
D104
F101
1A
J502
C101
220uF/25V
100uF/16V
L203
L205
TRAN
J501
K503
AGN200A44H
U301
K502
AGN200A44H
AGN200A44H
K501
C403
470uF/25V
470uF/25V
C402
C110
100u
D202
Blue
100u
C401
U401
TDA1519/1521