Dynamic Frequency Selection Test Report

Equipment	:	**Enterprise Digital Assistant (EDA)**
Model No.	:	**MC659B**
Brand Name	:	**Motorola**
Filing Type	:	**New Application**
Applicant	:	**Motorola, Inc. Motorola, Inc.** One Motorola Plaza, Holtsville, NY 11742-1300 USA
FCC ID	:	**UZ7MC659B**
IC ID	:	**109AN-MC659B**
Manufacturer	:	**Inventec Appliances Corp.** 37,Wugong 5th Road , Wugu industrial Park, Taipei County, Taiwan:248
Test Standard(s)	:	**47 CFR FCC Part 15 Subpart E § 15.407 / IC RSS-210 Annex 9**
Test Freq. Range	:	**5250~5350 MHz / 5470~5725 MHz**
Received Date	:	Jan. 27, 2010
Final Test Date	:	Jan. 27, 2010
Submission Type	:	**Original Equipment**
Operating Mode	:	**Client (without radar detection function)**

Statement

The test result in this report refers exclusively to the presented test model / sample.

Without written approval of SPORTON International Inc., the test report shall not be reproduced except in full.

The measurements and test results shown in this test report were made in accordance with the procedures and found in compliance with the limit given in FCC OET Order 06-96A (2006) and 47 CFR FCC Part 15 Subpart E § 15.407 / IC RSS-210 Annex 9. The test equipment used to perform the test is calibrated and traceable to NML/ROC.

Wayne Hsu 2010.2.22

Wayne Hsu

Table of Contents

1 SUMMARY OF THE TEST RESULT 1

2 GENERAL INFORMATION 2

2.1 Standard Requirement 2
2.2 Product Specification Table 2
2.3 Table for DFS Band Carrier Frequencies 2

3 DFS DETECTION THRESHOLDS AND RADAR TEST WAVEFORMS 4

3.1 Interference Threshold values, Master or Client incorporating In-Service Monitoring 4
3.2 DFS Response requirement values 4
3.3 Radar Test Waveforms Minimum Step 5
3.4 Short Pulse Radar Test Waveforms 5
3.5 Long Pulse Radar Test Waveform 6
3.6 Frequency Hopping Radar Test Waveform 9
3.7 Conducted Calibration Setup 11
3.8 Radar Waveform Calibration Procedure 11
3.9 Calibration Deviation 11

4 TEST SETUP AND TEST RESULT 12

4.1 Test setup 12
4.2 In-Service Monitoring for Channel Move Time, Channel Closing Transmission Time and Non-Occupancy Period Measurement 20
4.3 Result of Channel Move Time & Channel Closing Transmission Time & Non-Occupancy Period 21

5 MEASURING INSTRUMENTS 28

History of This Test Report

Original Issue Date: Feb. 05, 2010

Report No.: FZ010801

■ No additional attachment.

□ Additional attachment were issued as following record:

Attachment No.	Issue Date	Description

1 SUMMARY OF THE TEST RESULT

Applied Standard: FCC OET Order 06-96A (2006)			
Part	**Appendix**	**Description of Test**	**Result**
4.2	7.8.3	In-Service Monitoring for Channel Move Time, Channel Closing Transmission Time and Non-Occupancy Period	Complies

Note: Client without radar detection

2 GENERAL INFORMATION

2.1 Standard Requirement

FCC 15.407: U-NII devices operating in the 5250~5350 MHz / 5470~5725 MHz band. The U-NII device is required to have the capability to operate at least 6 dB below the mean EIRP value of 30 dBm. U-NII devices operating in the 5250~5350 MHz / 5470~5725 MHz bands shall employ a DFS radar detection mechanism to detect the presence of radar systems and to avoid co-channel operation with radar systems.

2.2 Product Specification Table

Specification Items	Description
Data Modulation	OFDM (BPSK / QPSK / 16QAM / 64QAM)
Data Rate (Mbps)	OFDM (6/9/12/18/24/36/48/54)
FCC DFS Function	5260~5320 MHz ; 5500~5700 MHz
IC DFS Function	5260~5320 MHz ; 5500~5600 MHz ; 5660~5700 MHz
Operating Mode	Client (without radar detection function)
Communication Mode	Frame based system
Power-on cycle	NA (No Channel Availability Check Function)
Hardware version	EVT2
Software Version	BSP2410

2.3 Table for DFS Band Carrier Frequencies

FCC DFS Band Carrier Frequencies

Frequency Band	Channel No.	Frequency
5250~5350 MHz Band 2	52	5260 MHz
	54	5270 MHz
	56	5280 MHz
	60	5300 MHz
	62	5310 MHz
	64	5320 MHz

Frequency Band	Channel No.		Frequency	
5470~5725 MHz Band 3	100	5500 MHz	120	5600 MHz
	102	5510 MHz	124	5620 MHz
	104	5520 MHz	126	5630 MHz
	108	5540 MHz	128	5640 MHz
	110	5550 MHz	132	5660 MHz
	112	5560 MHz	134	5670 MHz
	116	5580 MHz	136	5680 MHz
	118	5590 MHz	140	5700 MHz

IC DFS Band Carrier Frequencies

Frequency Band	Channel No.	Frequency
5250~5350 MHz Band 2	52	5260 MHz
	54	5270 MHz
	56	5280 MHz
	60	5300 MHz
	62	5310 MHz
	64	5320 MHz

Frequency Band	Channel No.		Frequency	
5470~5725 MHz Band 3	100	5500 MHz	118	5590 MHz
	102	5510 MHz	120	5600 MHz
	104	5520 MHz	132	5660 MHz
	108	5540 MHz	134	5670 MHz
	110	5550 MHz	136	5680 MHz
	112	5560 MHz	140	5700 MHz
	116	5580 MHz	-	-

3 DFS DETECTION THRESHOLDS AND RADAR TEST WAVEFORMS

3.1 Interference Threshold values, Master or Client incorporating In-Service Monitoring

Maximum Transmit Power	Value (see note)
≥ 200 milliwatt	-64 dBm
< 200 milliwatt	-62 dBm
Note 1: This is the level at the input of the receiver assuming a 0 dBi receive antenna. Note 2: Throughout these test procedures an additional 1 dB has been added to the amplitude of the test transmission waveforms to account for variations in measurement equipment. This will ensure that the test signal is at or above the detection threshold level to trigger a DFS response.	

There are APs for DFS test. One is 20MHz mode WL-605 [FCC ID: O9C-WL605]. Maximum EIRP power is 26.5 dBm for 20MHz mode AP and Maximum EIRP power is 26.0 dBm AP. Minimum antenna gain is 3CWE590 (5 GHz, 2.0 dBi Monopole). This antenna was used to set the threshold level (-64dBm + 2.0dBi +1 dB) during calibration of the test setup.

3.2 DFS Response requirement values

Parameter	Value
Non-occupancy period	Minimum 30 minutes
Channel Availability Check Time	60 seconds
Channel Move Time	10 seconds See Note 1.
Channel Closing Transmission Time	200 milliseconds + an aggregate of 60 milliseconds over remaining 10 second periods. See Notes 1/ 2.
U-NII Detection Bandwidth	Minimum 80% of the 99% power bandwidth See Note 3.
Note 1: The instant that the *Channel Move Time* and the *Channel Closing Transmission Time* begins is as follows: • For the Short pulse radar Test Signals this instant is the end of the *Burst*. • For the Frequency Hopping radar Test Signal, this instant is the end of the last radar *Burst* generated. • For the Long Pulse radar Test Signal this instant is the end of the 12 second period defining the radar transmission. Note 2: The *Channel Closing Transmission Time* is comprised of 200 milliseconds starting at the beginning of the *Channel Move Time* plus any additional intermittent control signals required facilitating *Channel* changes (an aggregate of 60 milliseconds) during the remainder of the 10 second period. The aggregate duration of control signals will not count quiet periods in between transmissions. Note 3: During the *U-NII Detection Bandwidth* detection test, radar type 1 is used and for each frequency step the minimum percentage of detection is 90%. Measurements are performed with no data traffic.	

3.3 Radar Test Waveforms Minimum Step

Step intervals of 0.1 microsecond for Pulse Width, 1 microsecond for PRI, 1 MHz for chirp width and 1 for the number of pulses will be utilized for the random determination of specific test waveforms.

3.4 Short Pulse Radar Test Waveforms

Radar Type	Pulse Width (μsec)	PRI (μsec)	Number of Pulses	Minimum Percentage of Successful Detection	Minimum Trials
1	1	1428	18	60%	30
2	1-5	150-230	23-29	60%	30
3	6-10	200-500	16-18	60%	30
4	11-20	200-500	12-16	60%	30
Aggregate (Radar Types 1-4)				80%	120

A minimum of 30 unique waveforms are required for each of the short pulse radar types 2 through 4. For short pulse radar type 1, the same waveform is used a minimum of 30 times. If more than 30 waveforms are used for short pulse radar types 2 through 4, then each additional waveform must also be unique and not repeated from the previous waveforms. The aggregate is the average of the percentage of successful detections of short pulse radar types 1-4.

FCC Radar Types (1~4) System Diagram

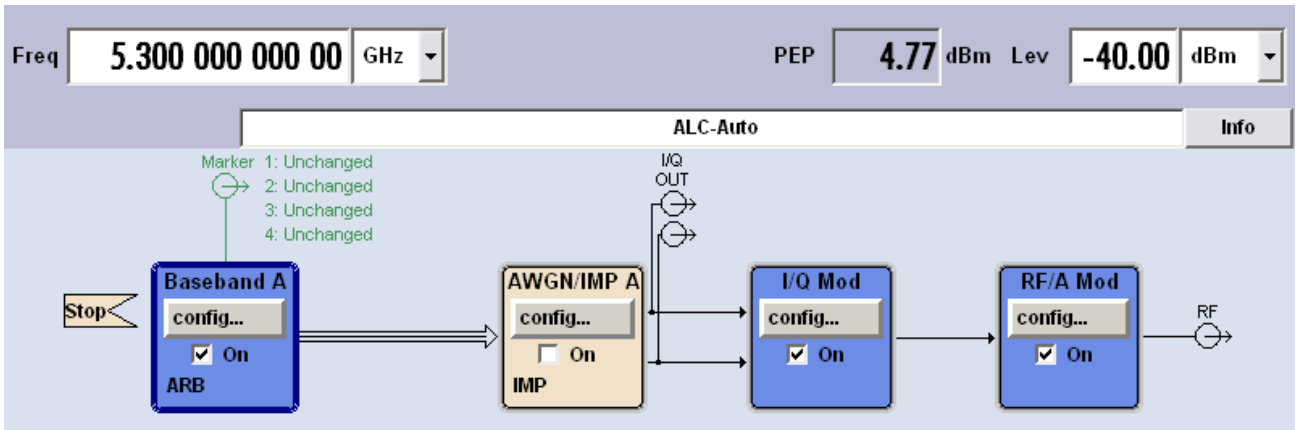

Used R&S SMU200A (Vector SG with one ARB) or SG + ARB

B11: Base-band Generator with ARB (16 M samples) and Digital Modulation

B13: Base-band Main Module

B106: frequency range (100 kHz to 6 GHz)

For selecting the waveform parameters from within the bounds of the signal type, system were random selection using uniform distribution.

3.5 Long Pulse Radar Test Waveform

Radar Type	Pulse Width (μsec)	Chirp Width (MHz)	PRI (μsec)	Number of Pulses per *Burst*	Number of *Bursts*	Minimum Percentage of Successful Detection	Minimum Trials
5	50-100	5-20	1000-2000	1-3	8-20	80%	30

The parameters for this waveform are randomly chosen. Thirty unique waveforms are required for the Long Pulse radar test signal. If more than 30 waveforms are used for the Long Pulse radar test signal, then each additional waveform must also be unique and not repeated from the previous waveforms. Each waveform is defined as follows:

(1) The transmission period for the Long Pulse Radar test signal is 12 seconds.

(2) There are a total of 8 to 20 Bursts in the 12 second period, with the number of Bursts being randomly chosen. This number is Burst_Count.

(3) Each Burst consists of 1 to 3 pulses, with the number of pulses being randomly chosen. Each Burst within the 12 second sequence may have a different number of pulses.

(4) The pulse width is between 50 and 100 microseconds, with the pulse width being randomly chosen. Each pulse within a Burst will have the same pulse width. Pulses in different Bursts may have different pulse widths.

(5) Each pulse has a linear FM chirp between 5 and 20 MHz, with the chirp width being randomly chosen. Each pulse within a Burst will have the same chirp width. Pulses in different Bursts may have different chirp widths. The chirp is centered on the pulse. For example, with a radar frequency of 5300 MHz and a 20 MHz chirped signal, the chirp starts at 5290 MHz and ends at 5310 MHz.

(6) If more than one pulse is present in a Burst, the time between the pulses will be between 1000 and 2000 microseconds, with the time being randomly chosen. If three pulses are present in a Burst, the time between the first and second pulses is chosen independently of the time between the second and third pulses.

(7) The 12 second transmission period is divided into even intervals. The number of intervals is equal to Burst_Count. Each interval is of length (12,000,000 / Burst_Count) microseconds. Each interval contains one Burst. The start time for the Burst, relative to the beginning of the interval, is between 1 and [(12,000,000 / Burst_Count) – (Total Burst Length) + (One Random PRI Interval)] microseconds, with the start time being randomly chosen. The step interval for the start time is 1 microsecond. The start time for each Burst is chosen independently.

A representative example of a Long Pulse radar test waveform:

(1) The total test signal length is 12 seconds.

(2) 8 Bursts are randomly generated for the Burst_Count.

(3) Burst 1 has 2 randomly generated pulses.

(4) The pulse width (for both pulses) is randomly selected to be 75 microseconds.

(5) The PRI is randomly selected to be at 1213 microseconds.

(6) Bursts 2 through 8 are generated using steps 3 – 5.

(7) Each Burst is contained in even intervals of 1,500,000 microseconds. The starting location for Pulse 1, Burst 1 is randomly generated (1 to 1,500,000 minus the total Burst 1 length + 1 random PRI interval) at the 325,001 microsecond step. Bursts 2 through 8 randomly fall in successive 1,500,000 microsecond intervals (i.e. Burst 2 falls in the 1,500,001 – 3,000,000 microsecond range).

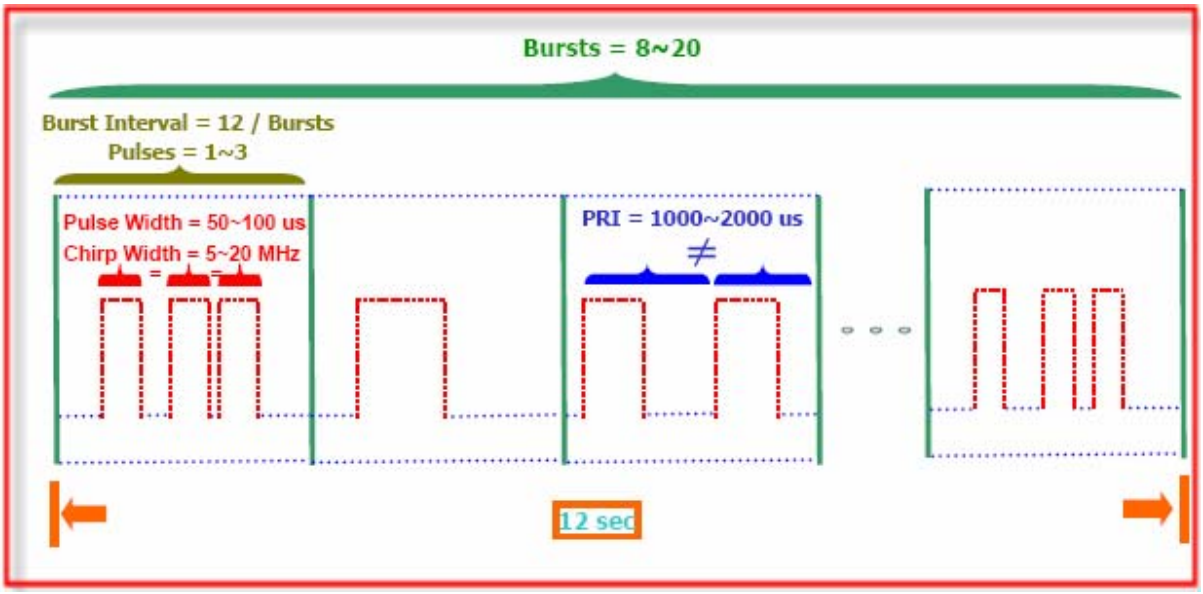

FCC Radar Types (5) System Diagram

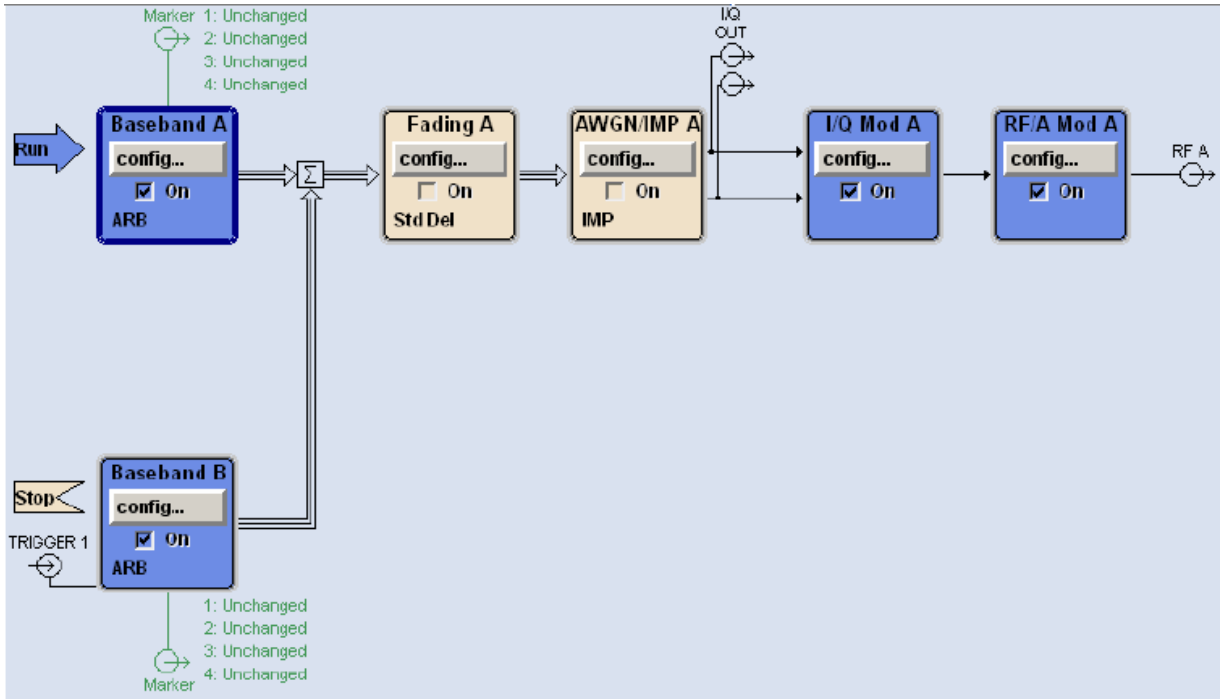

Used R&S SMU200A (Vector SG with two ARB)

Path A / Path B Two B11: Base-band Generator with ARB (16 M samples) and Digital Modulation

B13: Base-band Main Module

B106: frequency range (100 kHz to 6 GHz)

For selecting the waveform parameters from within the bounds of the signal type, system was random selection using uniform distribution.

3.6 Frequency Hopping Radar Test Waveform

Radar Type	Pulse Width (μsec)	PRI (μsec)	Pulses per Hop	Hopping Rate (kHz)	Hopping Sequence Length (msec)	Minimum Percentage of Successful Detection	Minimum Trials
6	1	333	9	0.333	300	70%	30

For the Frequency Hopping Radar Type, the same Burst parameters are used for each waveform. The hopping sequence is different for each waveform and a 100-length segment is selected from the hopping sequence defined by the following algorithm:

The first frequency in a hopping sequence is selected randomly from the group of 475 integer frequencies from 5250~5350 MHz / 5470~5725 MHz. Next, the frequency that was just chosen is removed from the group and a frequency is randomly selected from the remaining 474 frequencies in the group. This process continues until all 475 frequencies are chosen for the set. For selection of a random frequency, the frequencies remaining within the group are always treated as equally likely.

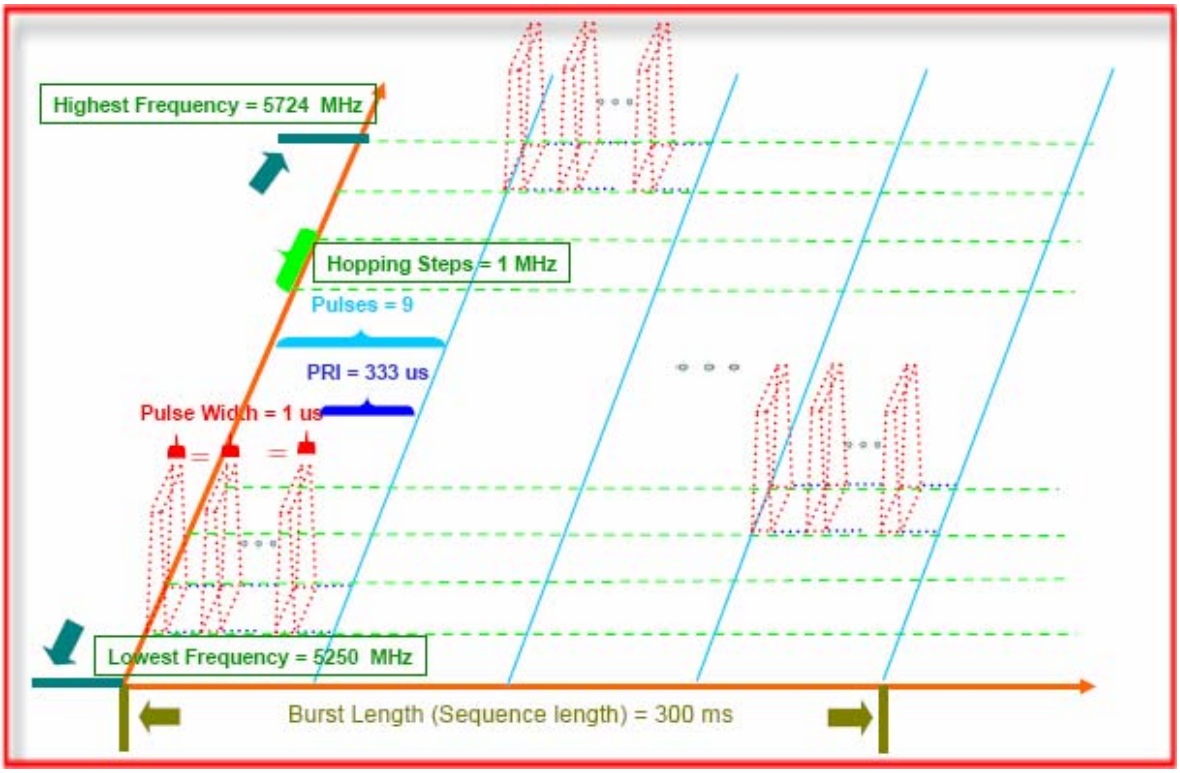

FCC Radar Types (6) System Diagram

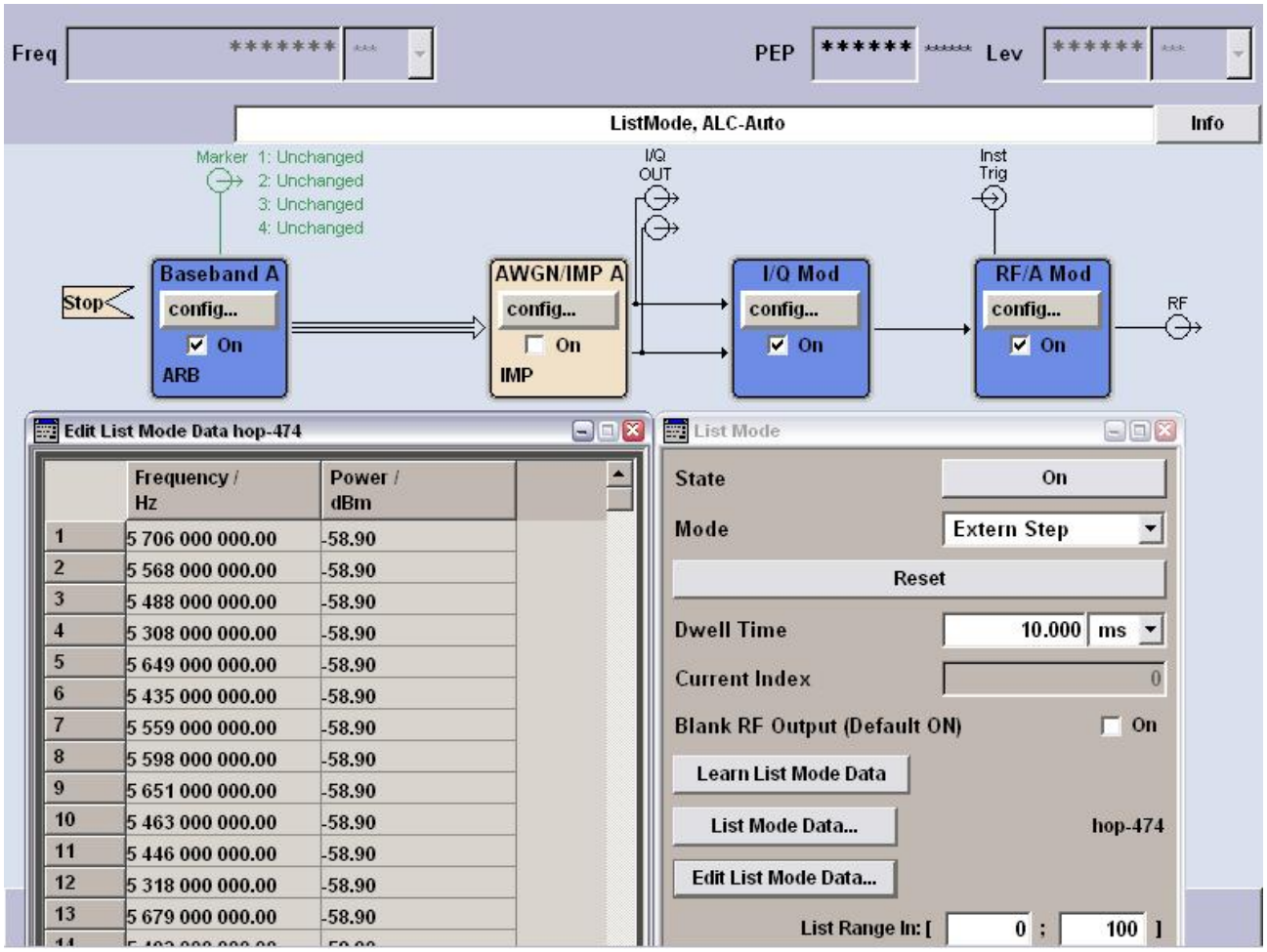

Used R&S SMU200A (Vector SG with one ARB)

B11: Base-band Generator with ARB (16 M samples) and Digital Modulation

B13: Base-band Main Module

B106: frequency range (100 kHz to 6 GHz)

For selecting the waveform parameters from within the bounds of the signal type, systems were random selection using uniform distribution.

3.7 Conducted Calibration Setup

Slave configure

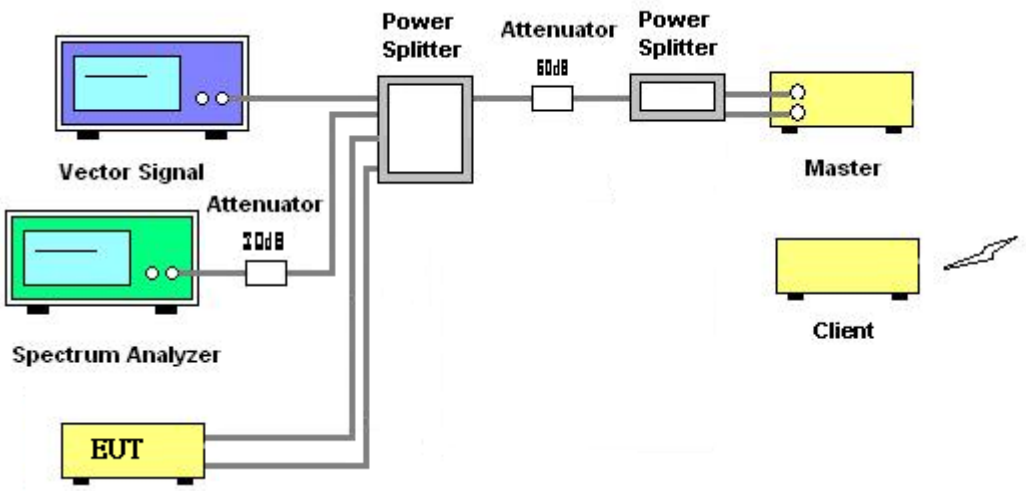

3.8 Radar Waveform Calibration Procedure

The Interference **Radar Detection Threshold Level** is (-64dBm + 2.0dBi +1 dB) = -61 dBm that had been taken into account the output power range and antenna gain. The above equipment setup was used to calibrate the conducted Radar Waveform. A vector signal generator was utilized to establish the test signal level for each radar type. During this process there were replace 50ohm terminal form Master and Client device and no transmissions by either the Master or Client Device. The spectrum analyzer was switched to the zero spans (Time Domain) at the frequency of the Radar Waveform generator. Peak detection was used. The spectrum analyzer resolution bandwidth (RBW) and video bandwidth (VBW) were set to at least 3 MHz. The vector signal generator amplitude was set so that the power level measured at the spectrum analyzer was –62 dBm. Capture the spectrum analyzer plots on short pulse radar types, long pulse radar type and hopping radar waveform.

3.9 Calibration Deviation

There is no deviation with the original standard.

4 TEST SETUP AND TEST RESULT

4.1 Test setup

4.1.1 Test Setup Diagram

Following is the test setup for generate the radar waveforms and used to monitor UNII device.

Slave configure

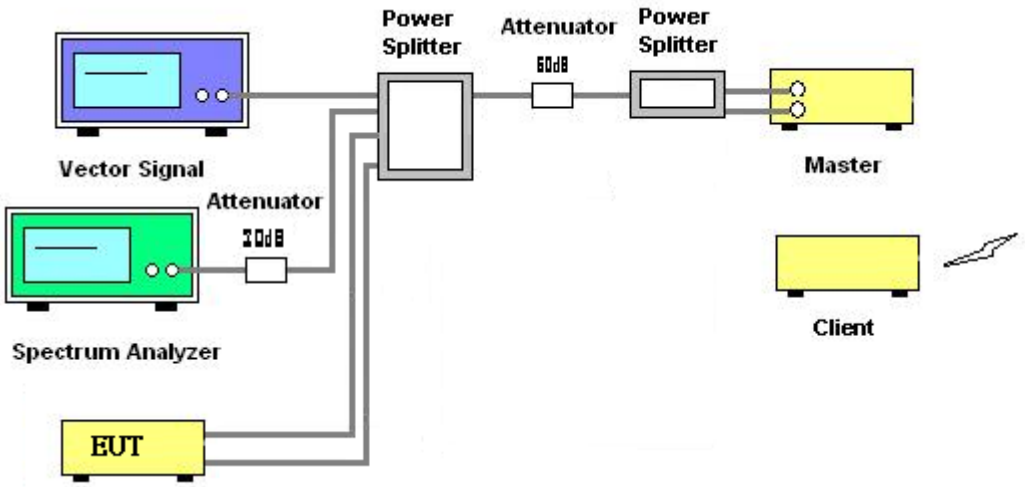

Master (AP) Data Traffic Plot IEEE 802.11a 5250~5350 MHz

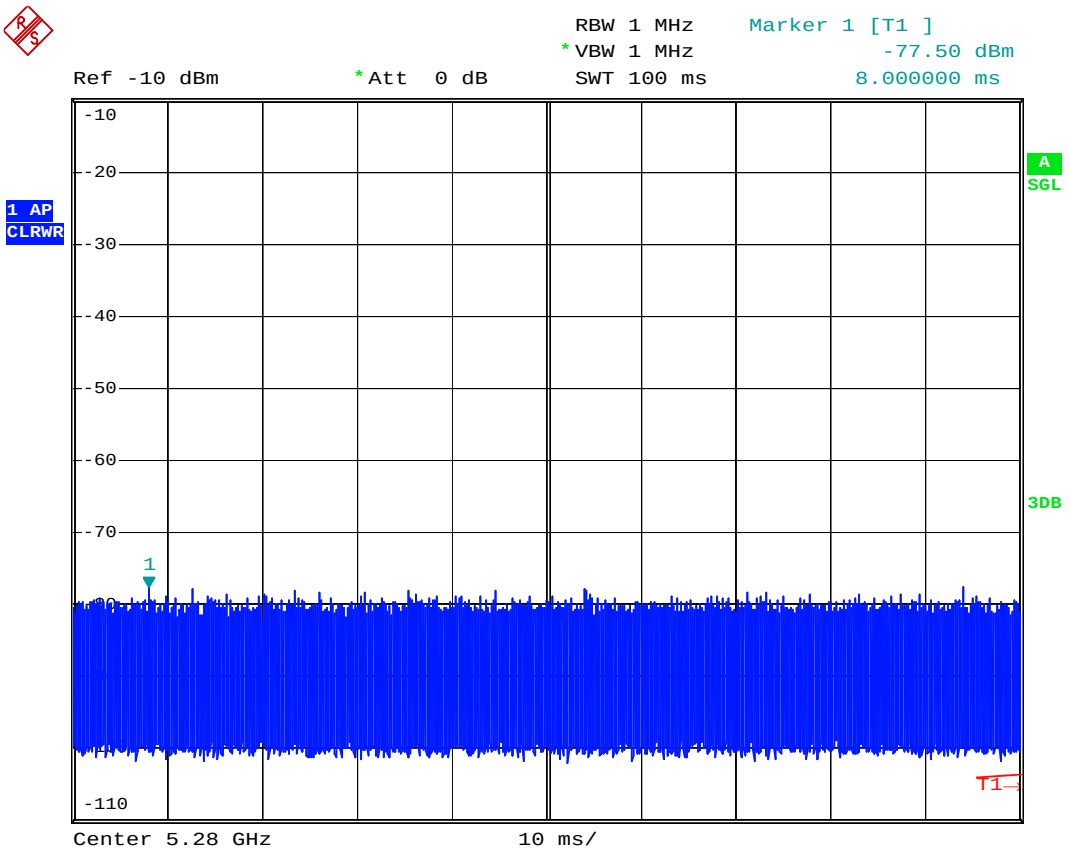

Date: 27.JAN.2010 13:49:01

Master (AP) Data Traffic Plot IEEE 802.11a 5470~5725 MHz

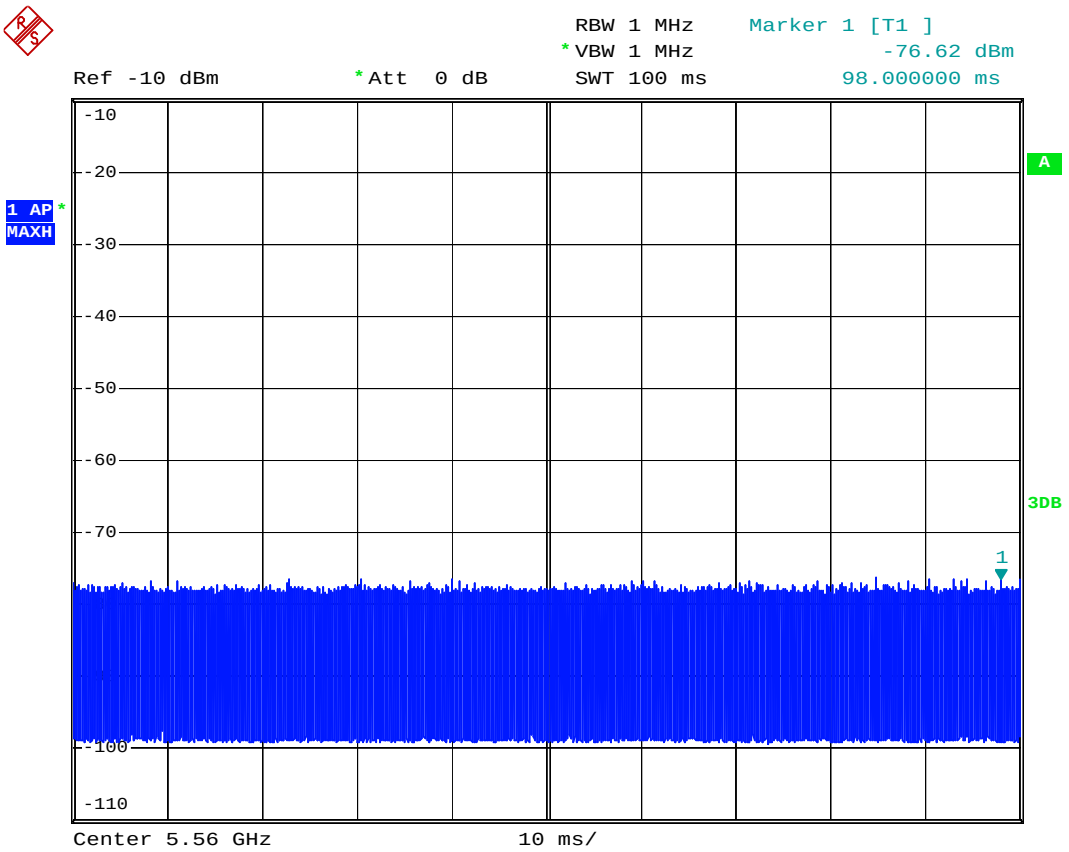

Date: 27.JAN.2010 13:05:50

Data Traffic Plot (Slave) IEEE 802.11a 5250~5350 MHz

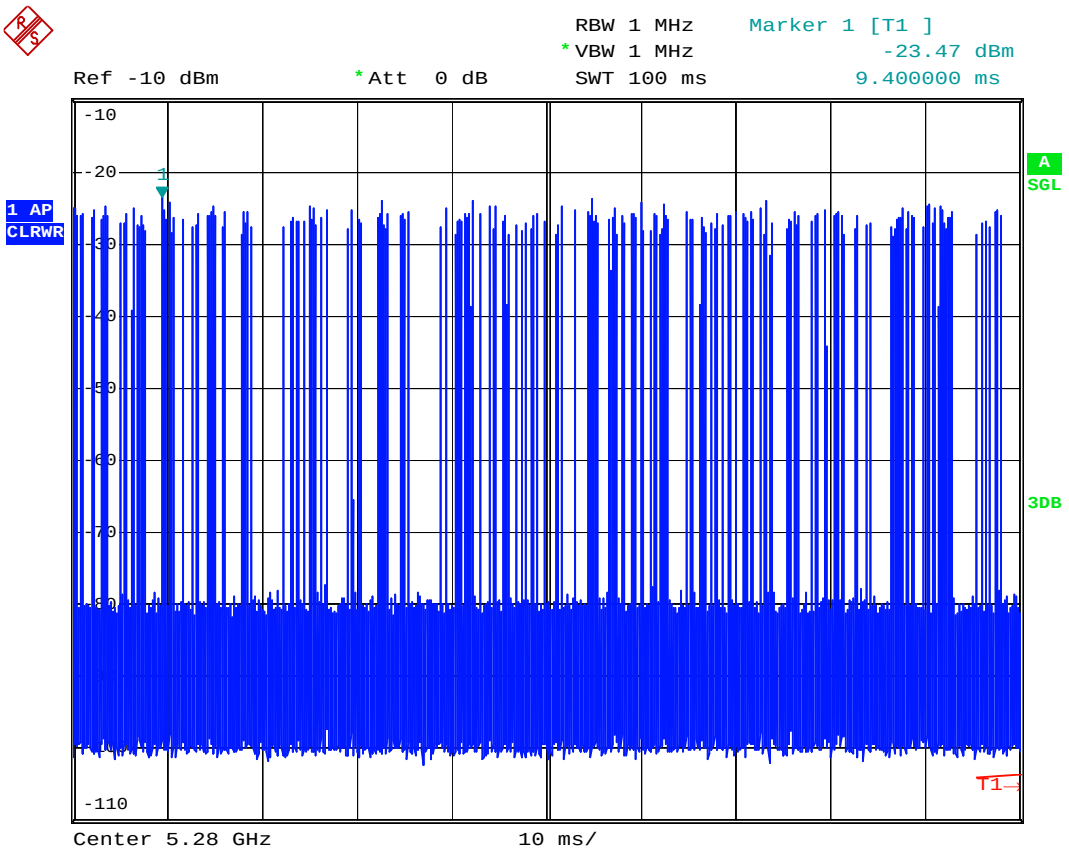

Date: 27.JAN.2010 13:49:43

Data Traffic Plot (Slave) IEEE 802.11a 5470~5725 MHz

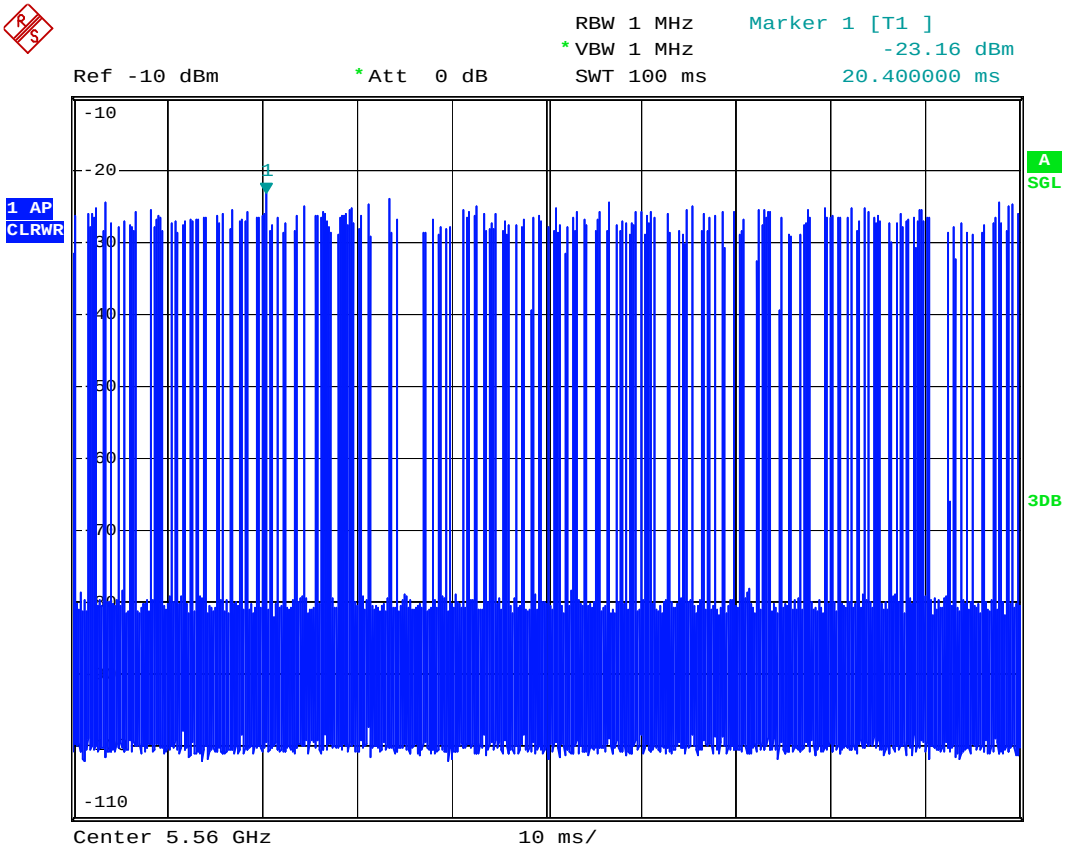

Date: 27.JAN.2010 13:06:54

4.1.3 Supporting Units

Support Unit	Brand	Model No.	Serial No.	Software Version
MPEG Server	R&S	SMU200A	102098	Win XP SP2 / SMU200A 02.04.111 beta
PC	HP	D330ut	-	Win XP SP2
AP (Master)	3Com	WL-605 (FCC ID: O9C-WL605)	-	WP741_normal_v18.WW
MPEG Test File	-	-	-	Note: From NTIA website

4.1.4 Test Setup Operation

System testing was performed with the designated MPEG test file that streams full motion video from the Access Point to the Client in full motion video mode using the media player with the V2.61 Codec package.. This file is used by IP and Frame based systems for loading the test channel during the In-service compliance testing of the U-NII device.

The waveform parameters from within the bounds of the signal type are selected randomly using uniform distribution.

A spectrum analyzer is used as a monitor to verify that the EUT has vacated the Channel within the (Channel Closing Transmission Time and Channel Move Time, and does not transmit on a Channel during the Non-Occupancy Period after the detection and Channel move.

4.2 In-Service Monitoring for Channel Move Time, Channel Closing Transmission Time and Non-Occupancy Period Measurement

4.2.1 Limit

The EUT has In-Service Monitoring function to continuously monitor the radar signals, If radar is detected, must leave the channel (Shutdown). The Channel Move Time to cease all transmissions on the current Channel upon detection of a Radar Waveform above the DFS Detection Threshold within 10 sec. The total duration of Channel Closing Transmission Time is 260ms. Channel Closing Transmission Time is comprised of 200 ms starting at the beginning of the Channel Move Time plus any additional intermittent control signals between 9.8 sec after 200 ms starting from the end of radar burst. The Non-Occupancy Period time is 30 minute during which a Channel will not be utilized after a Radar Waveform is detected on that Channel.

4.2.2 Test Procedures

1. When radar burst with a level equal to the DFS Detection Threshold + 1dB is generated on the Operating Channel of the U-NII device. A U-NII device operating as a Client Device will associate with the Master at Channel. Stream the MPEG test file from the Master Device to the Client Device on the selected Channel for the entire period of the test. At time T0 the Radar Waveform generator sends a Burst of pulses for each of the radar types at Detection Threshold + 1dB.

2. Observe the transmissions of the EUT at the end of the radar Burst on the Operating Channel. Measure and record the transmissions from the EUT during the observation time (Channel Move Time). One 12 second plot been reported for the Short Pulse Radar Types 1. The plot for the Short Pulse Radar Types start at the end of the radar burst. The Channel Move Time will be calculated based on the plot of the Short Pulse Radar Type.

3. To measure the total intermittent control signals transmission time. The total intermittent control signals transmission time is measured between 9.8 sec that is calculated 10 sec starting at the beginning of the Channel Move Time and minus 200ms. The spectrum analyzer set to zero span tuned to the center frequency of the EUT operating channel at the radar simulated frequency, peak detection, and max hold, the dwell time per bin is given by: Dwell = S / B; where Dwell is the dwell time per spectrum analyzer sampling bin, S is the sweep time and B is the number of spectrum analyzer sampling bins. The total intermittent control signals transmission time is calculated by: C = N X Dwell ; where C is the total intermittent control signals transmission time between 9.8 sec, N is the number of spectrum analyzer sampling bins showing total intermittent control signals and Dwell is the dwell time per bin.

4. Measure the EUT for more than 30 minutes following the channel close/move time to verify that the EUT does not resume any transmissions on this Channel.

4.2.3 Test Deviation

There is no deviation with the original standard.

4.3 Result of Channel Move Time & Channel Closing Transmission Time & Non-Occupancy Period

IEEE 802.11 a

Parameter	Test Result	Limit
	Radar Type 1	
Test Channel (MHz)	5260~5320	-
Channel Move Time (sec)	0	< 10s
Intermittent control signals (ms) (Note)	0ms	< 60ms
Non-Occupancy Period (min.)	30 min	≧30

IEEE 802.11 a

Parameter	Test Result	Limit
	Radar Type 1	
Test Channel (MHz)	5500~5700	-
Channel Move Time (sec)	0	< 10s
Intermittent control signals (ms) (Note)	0ms	< 60ms
Non-Occupancy Period (min.)	30 min	≧30

Note: The total intermittent control signals transmission time is measured between 9.8 sec that is calculated 10 sec starting at the beginning of the Channel Move Time and minus 200ms.

4.3.1 Channel Move Time Plot

Radar #1 Channel Move Time IEEE 802.11a 5250~5350 MHz

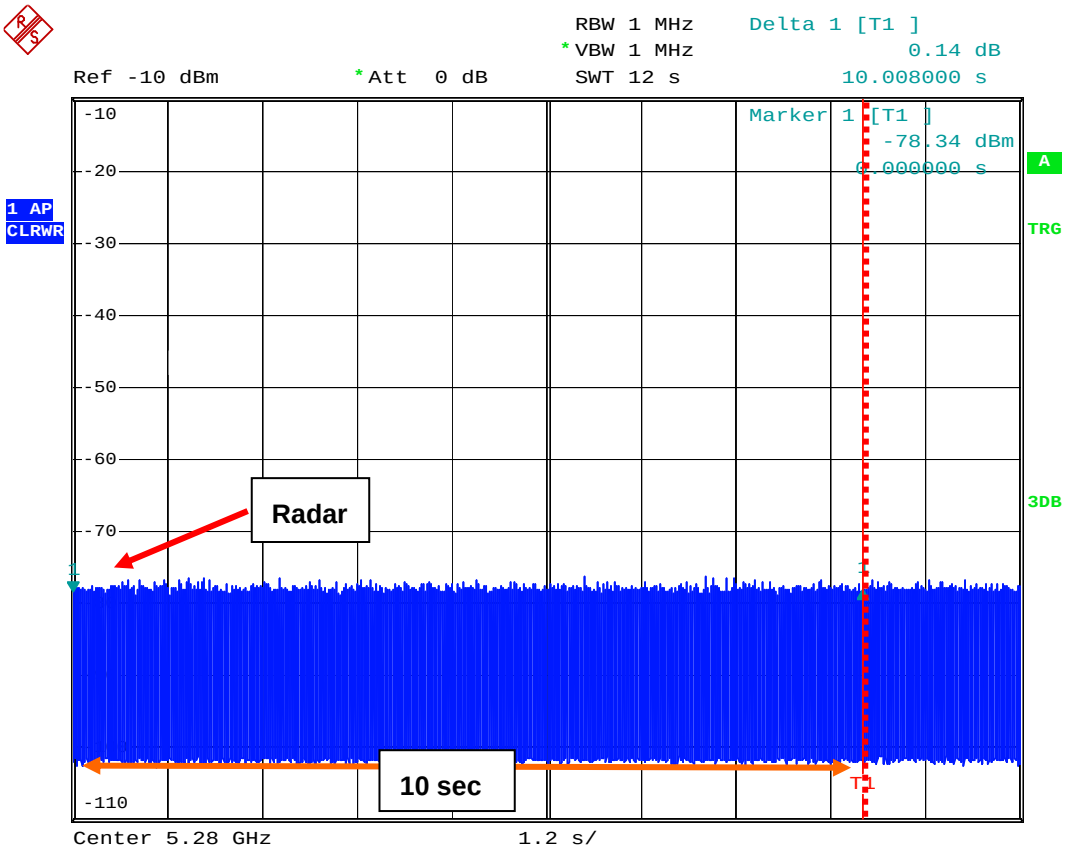

Date: 27.JAN.2010 15:30:03

Radar #1 Channel Move Time IEEE 802.11a 5470~5725 MHz

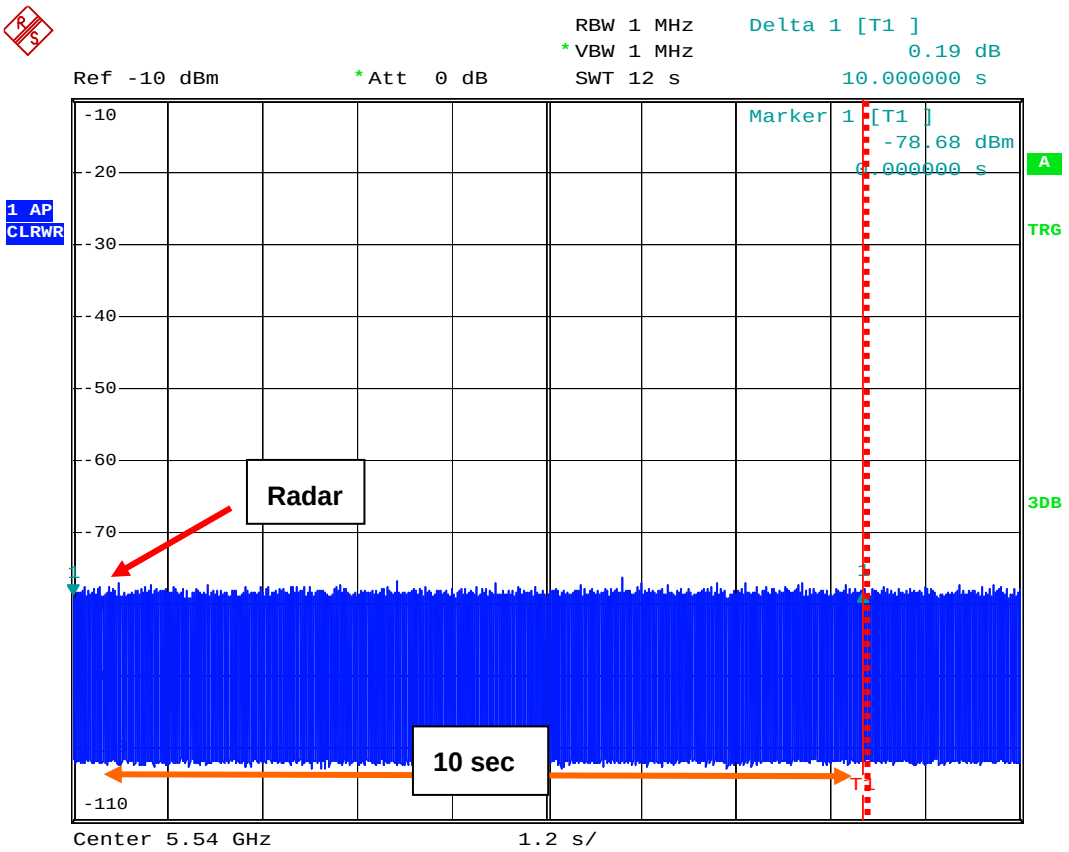

Date: 27.JAN.2010 15:38:27

4.3.2 Channel Closing Transmission Time Plot

Radar #1 Channel Closing Transmission Time is comprised of 200 ms starting at the beginning of the Channel Move Time plus 0ms intermittent control signals of 9.8 sec period (IEEE 802.11a 5250~5350 MHz

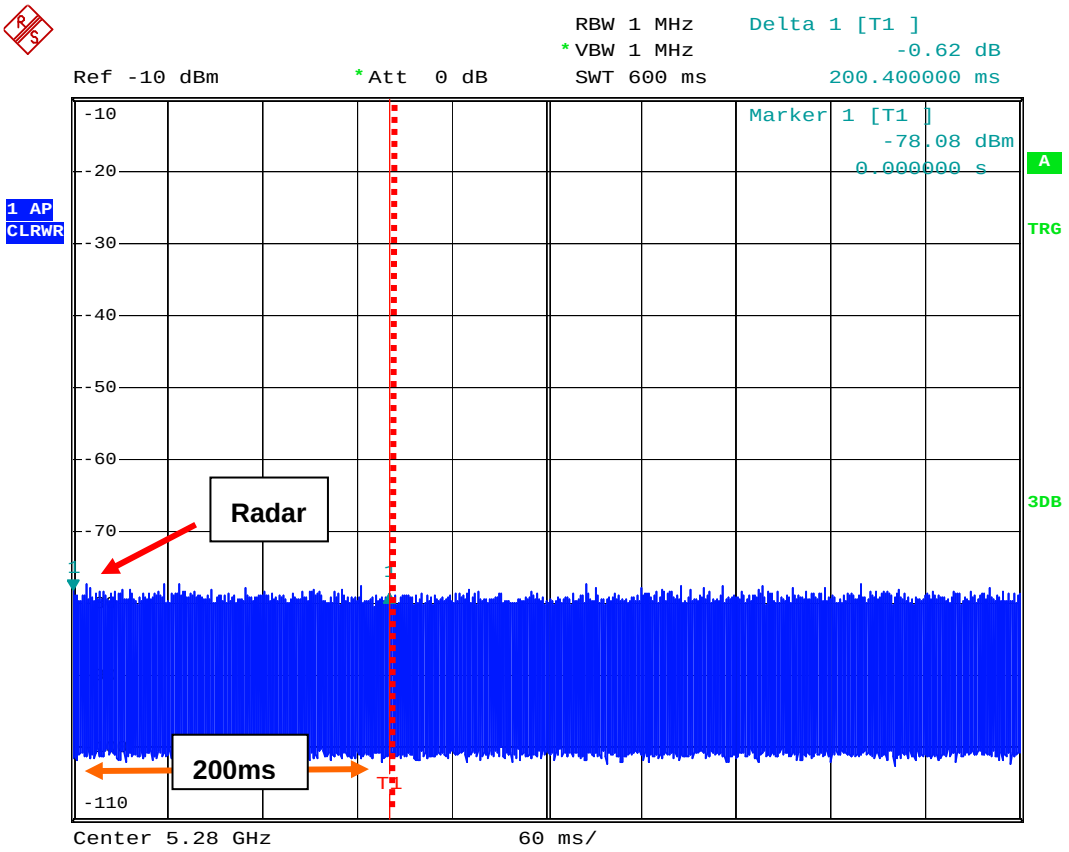

Date: 27.JAN.2010 15:36:15

Dwell is the dwell time per spectrum analyzer sampling bin.

S is the sweep time

B is the number of spectrum analyzer sampling bins

C is the intermittent control signals of Channel Closing Transmission Time in 9.8 sec period.

N is the number of spectrum analyzer sampling bins showing total intermittent control signals.

Dwell (1.2 ms)= S (0.6 sec) / B (500)

C (0 ms) = N (0) X Dwell (1.2 ms)

Radar #1 Channel Closing Transmission Time is comprised of 200 ms starting at the beginning of the Channel Move Time plus 0ms intermittent control signals of 9.8 sec period (IEEE 802.11a 5470~5725 MHz

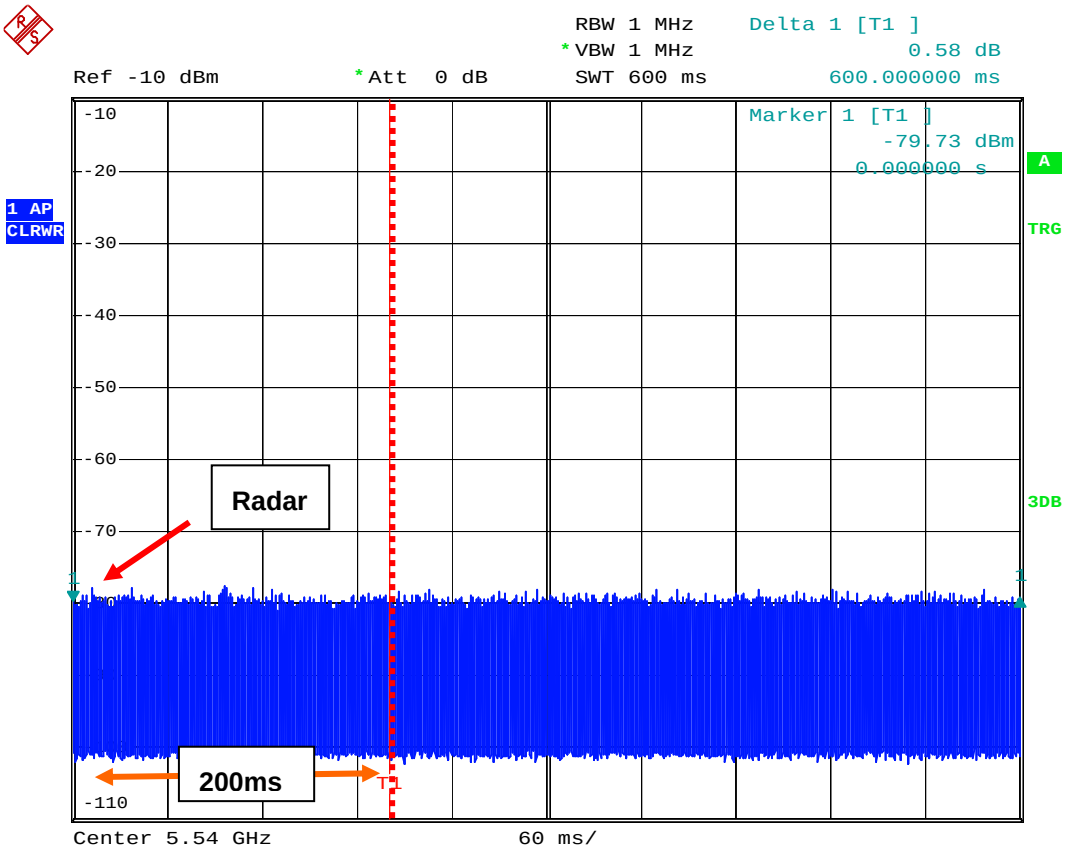

Date: 27.JAN.2010 15:38:55

Dwell is the dwell time per spectrum analyzer sampling bin.

S is the sweep time

B is the number of spectrum analyzer sampling bins

C is the intermittent control signals of Channel Closing Transmission Time in 9.8 sec period.

N is the number of spectrum analyzer sampling bins showing total intermittent control signals.

Dwell (1.2 ms)= S (0.6 sec) / B (500)

C (0 ms) = N (0) X Dwell (1.2 ms)

4.3.3 Non-Occupancy Period Plot

Radar #1 Non-Occupancy Period IEEE 802.11a 5250~5350 MHz

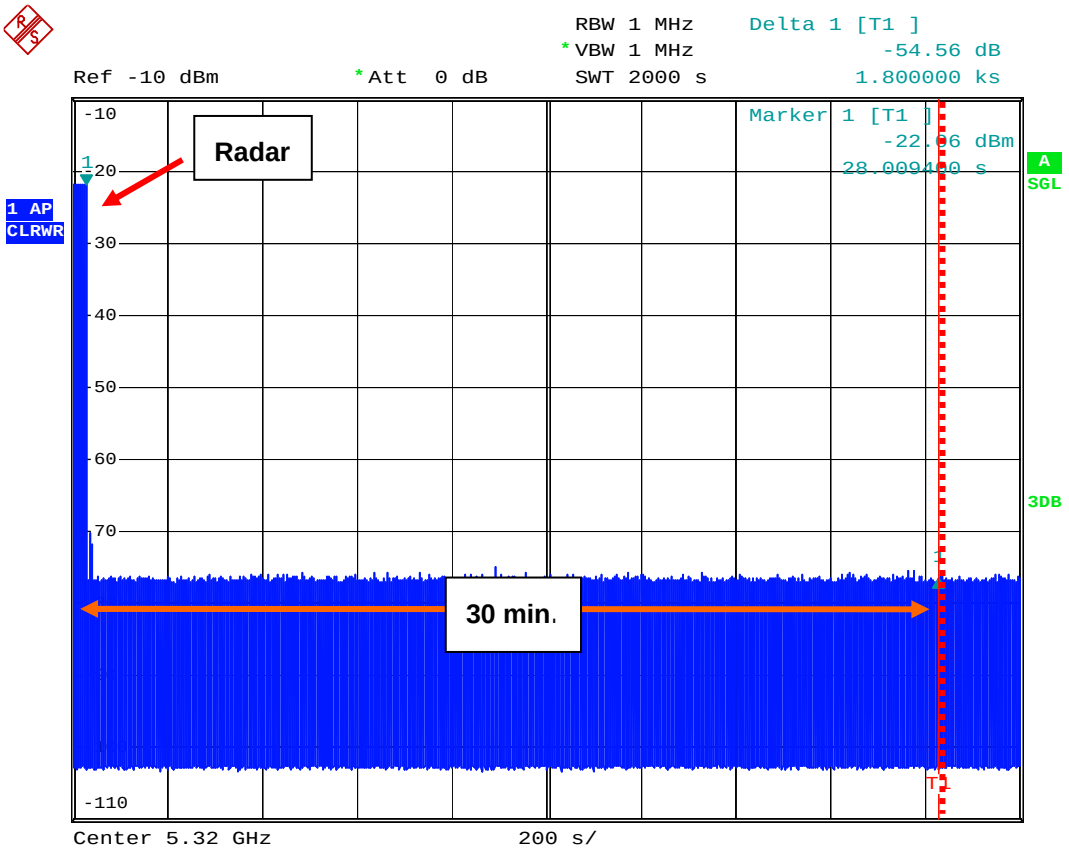

Date: 27.JAN.2010 15:16:31

Radar #1 Non-Occupancy Period IEEE 802.11a 5470~5725 MHz

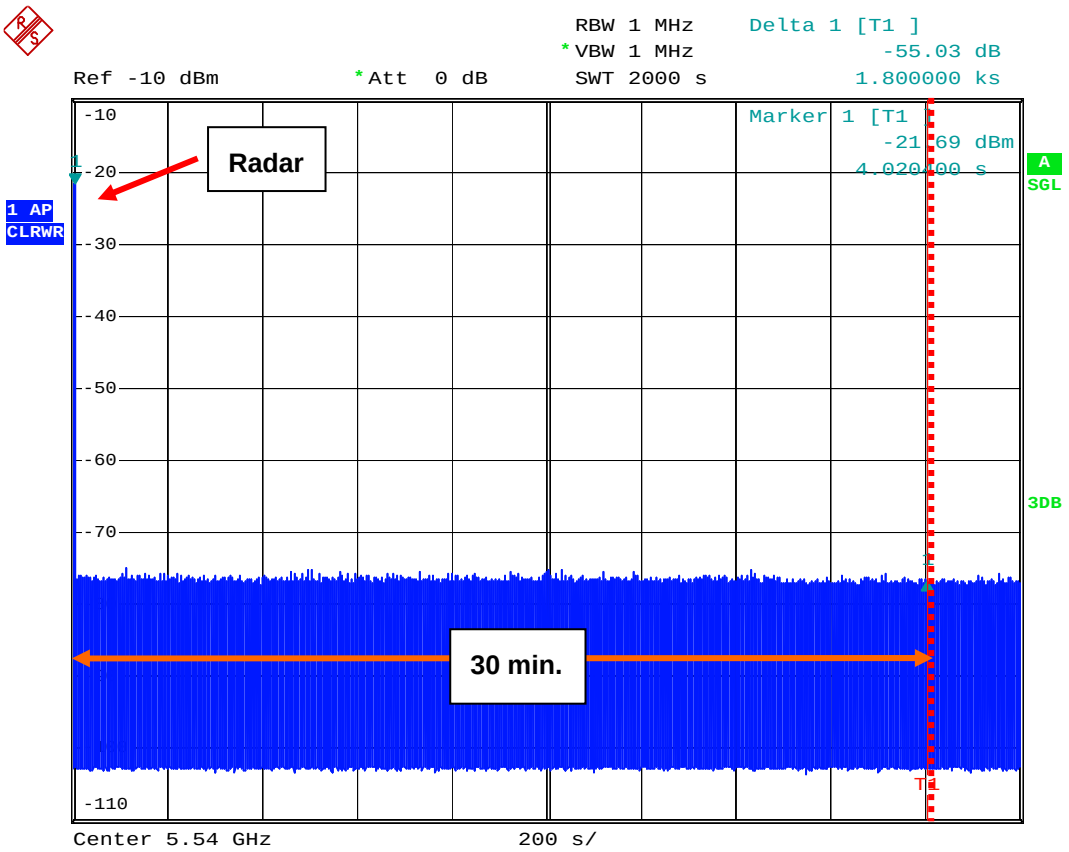

Date: 27.JAN.2010 13:48:25

5 MEASURING INSTRUMENTS

Instrument	Manufacturer	Model No.	Serial No.	Characteristics	Calibration Date	Remark
Spectrum Analyzer	R&S	FSP30	100023	9kHz ~ 30GHz	Jan. 08, 2010	Conducted (TH01-HY)
RF CABLE-1m	Jye Bao	RG142	CB034-1m	20MHz ~ 7GHz	Dec. 02, 2009	Conducted (TH01-HY)
Vector Signal Generator	R&S	SMU200A	102098	100kHz ~ 6GHz	Feb. 13, 2009	Conducted (TH01-HY)
RF Power Divider	HP	11636A	102934	N/A	N/A	Conducted (TH01-HY)
RF Power Splitter	Anaren	44100	881840 / 881850	N/A	N/A	Conducted (TH01-HY)
RF Power Splitter	Anaren	42100	8817950 / 8817960	N/A	N/A	Conducted (TH01-HY)
RF Cable-0.5m	SUHNER	SUCOFLEX 106	TH01-HY –01~06	1GHz~26.5GHz	Feb. 04, 2009	Conducted (TH01-HY)

Note: Calibration Interval of instruments listed above is one year.