AP-8432

Access Point

Installation Guide

ZEBRA

MN-002724-01

Zebra and the Zebra head graphic are registered trademarks of ZIH Corp. The Symbol logo is a registered trademark of Symbol Technologies, Inc., a Zebra Technologies company.

© 2016 Symbol Technologies, Inc.

1.0 Introduction 5
1.1 Document Conventions 5
1.2 Warnings 5
1.3 Site Preparation 6
1.4 AP-8432 Package Contents 6
1.4.1 Features 6
1.5 AP-8432 Antennas 7
1.5.1 Dual Band 2.4 GHz / 5 GHz Internal - US/Taiwan/EU/Canada .. 7
2.0 Hardware Installation 8
2.1 Installation Instructions 8
2.2 Precautions 9
2.3 Access Point Placement 9
2.4 Power Injector System 9
2.5 Wall Mount Instructions 12
2.5.1 Wall Mount Procedure - New Installation 13
2.6 Suspended Ceiling T-Bar Mount Instructions 15
2.7 LED Indicators 18
3.0 Basic Access Point Configuration 20
4.0 AP-8432 Access Point Specifications 32
4.1 Electrical Characteristics 32
4.2 Physical Characteristics 32
4.3 Radio Characteristics 33
5.0 Regulatory Information 34
5.1 Regulatory Information 34
5.1.1 Bluetooth Wireless Technology 34
5.2 Wireless Device Country Approvals 34
5.2.1 Country Selection 35
5.2.2 Frequency of Operation – FCC and IC 35
5.3 Warnings for Use of Wireless Devices 36

- 5.3.1 Potentially Hazardous Atmospheres - Vehicle Installation 36
- 5.3.2 Potentially Hazardous Atmospheres - Fixed Installations 36
- 5.3.3 Safety in Aircraft 36
- 5.3.4 Safety in Hospitals 36
- 5.4 RF Exposure Guidelines 37
- 5.4.1 Safety Information 37
- 5.4.2 International 38
- 5.4.3 EU 38
- 5.4.4 US and Canada 38
- 5.5 Power Supply 39
- 5.6 Radio Frequency Interference Requirements—FCC 39
- 5.6.1 Radio Transmitters (Part 15) 40
- 5.6.2 Radio Frequency Interference Requirements - Canada 40
- 5.7 CE Marking and European Economic Area (EEA) 41
- 5.8 Statement of Compliance 41
- 5.9 Japan (VCCI) - Voluntary Control Council for Interference 42
- 5.10 Korea Warning Statement for Class B ITE 42
- 5.11 Other Countries 42
- 5.12 Waste Electrical and Electronic Equipment (WEEE) 45
- 5.13 TURKISH WEEE Statement of Compliance 46

6.0 Support 47

7.0 Zebra Technologies Inc. End-User Software License Agreement ... 48

8.0 AP-8432 Access Point China ROHS Compliance 53

1 Introduction

Zebra AP-8432 internal antenna Access Point's are high-tier Access Points for dependable and efficient network performance.

The Access Point’s unique WiNG 5 software enables the Access Point to function as either a *Standalone* Access Point, an *Adaptive* Access Point or a *Virtual Controller*.

If new to Access Point technology, refer to the *WiNG Access Point System Reference Guide* to familiarize yourself with Access Point technology and the feature set supported by the WiNG operating system. The guide is available at *www.zebra.com/support*.

This document is written for the qualified network device installer.

1.1 Document Conventions

The following graphical alerts are used in this document to indicate notable situations:

Note • Tips, hints, or special requirements that you should take note of.

Caution • Care is required. Disregarding a caution can result in data loss or equipment malfunction.

1.2 Warnings

- Read all installation instructions and site survey reports, and verify correct equipment installation before connecting the AP-8432 Access Point.
- Remove jewelry and watches before installing this equipment.
- Verify any device connected to this unit is properly wired and grounded.
- Verify there is adequate ventilation around the device, and that ambient temperatures meet equipment operation specifications.

1.3 Site Preparation

- Consult your site survey and network analysis reports to determine specific equipment placement, power drops, and so on.
- Assign installation responsibility to the appropriate personnel.
- Identify and document where all installed components are located.
- Ensure adequate, dust-free ventilation to all installed equipment.
- Identify and prepare Ethernet and console port connections.
- Verify cable lengths are within the maximum allowable distances for optimal signal transmission.

1.4 AP-8432 Package Contents

An AP-8432 Access Point is available in internal antenna configurations only. An AP-8432 ships with the following:

- AP-8432 Access Point
- AP-8432 Installation Guide *(This Guide)*
- Wall mount screws and mounting bracket

1.4.1 Features

An AP-8432 Access Point supports the following feature set:

- Two RJ-45 connectors (GE1/POE and Console)
- Four LED indicators
- One 5GHz 802.11ac radio, and a dual band 2.4GHz/5GHz 802.11ac radio
- One Bluetooth radio
- Baud rate: 115200
- PoE out support on 2nd Ethernet port

GE1/POE accepts 802.3at or 802.3af compliant power from an external source.

Note • When operating in a Gigabit Ethernet environment, CAT-5e or CAT-6 cable is recommended for Gigabit operation. The equipment is to be connected only to PoE networks. Zebra does not recommend routing network cables outside.

1.5 AP-8432 Antennas

1.5.1 Dual Band 2.4 GHz / 5 GHz Internal - US

An AP-8432 internal antenna Access Point supports the following dual band antenna:

Antenna Type	*2.4 GHZ Gain (dBi)*	*5 GHZ Gain (dBi)*	*Elevation Gain (dBi)*
Monopole	Bluetooth: 7.7 Radio 2: 4.4	Radio 1: 6.8 Radio 2: 5.9	Radio 1: 3.4 Radio 2: 4.1

2 Hardware Installation

2.1 Installation Instructions

An AP-8432 Access Point mounts either on a wall (with *M 3.5 x 0.6 x 23 MM* pan head screws and mounting bracket or equivalent) or on a suspended ceiling T-bar.

To prepare for the installation:

1. Match the part number on the purchase order with the part numbers in the packing list and on the case of the Access Point.
2. Verify the contents of the box include the intended AP-8432 Access Point, and the included hardware matches the package contents (see *AP-8432 Package Contents on page 6*).

Part Number	***Description***
AP-8432-680B30-US	AP-8432 dual radio 802.11ac 4x4:4 MIMO Access Point internal antenna US version
AP-8432-680B30-WR	AP-8432 dual radio 802.11ac 4x4:4 MIMO Access Point internal antenna International version
AP-8432-680B30-EU	AP-8432 dual radio 802.11ac 4x4:4 MIMO Access Point internal antenna EU version

3. Review site survey and network analysis reports to determine the location and mounting position for the AP-8432 Access Point.
4. Connect a CAT-5 or better Ethernet cable to a compatible 802.3at or 802.3af power source and run the cable to the installation site. Ensure there is sufficient slack in the cable to perform the installation steps.

Note • When operating in a Gigabit Ethernet environment, CAT-5e or CAT-6 cable is recommended for Gigabit operation.

2.2 Precautions

Before installing an AP-8432 Access Point, verify the following:

- Your are using the correctly rated power solution for the AP-8432 (either the AP-PSBIAS-2P3-ATR Power Injector or the PWR-BGA48V45W0WW external power supply)
- Do not to install the AP-8432 in wet or dusty areas.
- Verify the environment has a continuous temperature range between 32° F to 104° or 0° C to 50° C.

2.3 Access Point Placement

For optimal performance, install the Access Point away from transformers, heavy-duty motors, fluorescent lights, microwave ovens, refrigerators and other industrial equipment. Signal loss can occur when metal, concrete, walls or floors block transmission. Install the Access Point in an open area or add Access Points as needed to improve coverage.

Antenna coverage is analogous to lighting. Users might find an area lit from far away to be not bright enough. An area lit sharply might minimize coverage and create *dark areas.* Uniform antenna placement in an area (like even placement of a light bulb) provides even, efficient coverage.

Install the Access Point at an ideal height of 10 feet from the ground.

To maximize the Access Point’s radio coverage area, Zebra recommends conducting a site survey to define and document radio interference obstacles before installing the Access Point.

2.4 Power Injector System

An AP-8432 Access Point can receive power via an Ethernet cable connected to the GE1/POE (LAN) port.

When users purchase a WLAN solution, they often need to place Access Points in obscure locations. In the past, a dedicated power source was required for each Access Point in addition to the Ethernet infrastructure. This often required an electrical contractor to install power drops at each Access Point location. The Power Injector merges power and Ethernet into one cable, reducing the burden of installation and allowing optimal Access Point placement in respect to the intended coverage area.

Caution • Using a non-compliant injector, or an injector supporting legacy modes prohibits the AP-8533 from functioning optimally.

Caution • Do not plug the AP-PSBIAS-2P3-ATR Power Injector into the Access Point’s Console port. Connecting the Power Injector into the console port can damage the port and void the Access Point’s product warranty.

The AP-8432’s supported Power Injector (Part No. AP-PSBIAS-2P3-ATR) is a high power POE Injector delivering up to 30 watts. The Access Point can only use a Power Injector when connecting the unit to the Access Point’s GE1/POE port. The Power Injector is separately ordered and not shipped with an existing AP-8432.

The Access Point power supply (Part No. PWR-BGA48V45W0WW) is not included with the Access Point and is orderable separately as an accessory. If the Access Point is provided both POE power and PWR-BGA48V45W0WW power concurrently, the Access Point will source power from the PWR-BGA48V45W0WW supply only. Disconnecting the AC power from the PWR-BGA48V45W0WW causes the Access Point to re-boot before sourcing power from the POE Power Injector. If the AP is operating using injector supplied power, the AP will not automatically reboot if an AC adapter is connected. The Access Point continues to operate with power supplied from the AC adapter without change to the Access Point operating configuration. If using AC adapter supplied power and a change to the AP’s operating configuration is warranted, the Access Point needs to be manually rebooted by the customer.

Caution • The Access Point supports any standards-based compliant power source. However, using the wrong solution (including a POE system used on a legacy Access Point) could either limit functionality or severely damage the Access Point and void the product warranty.

A separate Power Injector is required for each AP-8432 Access Point comprising the network.

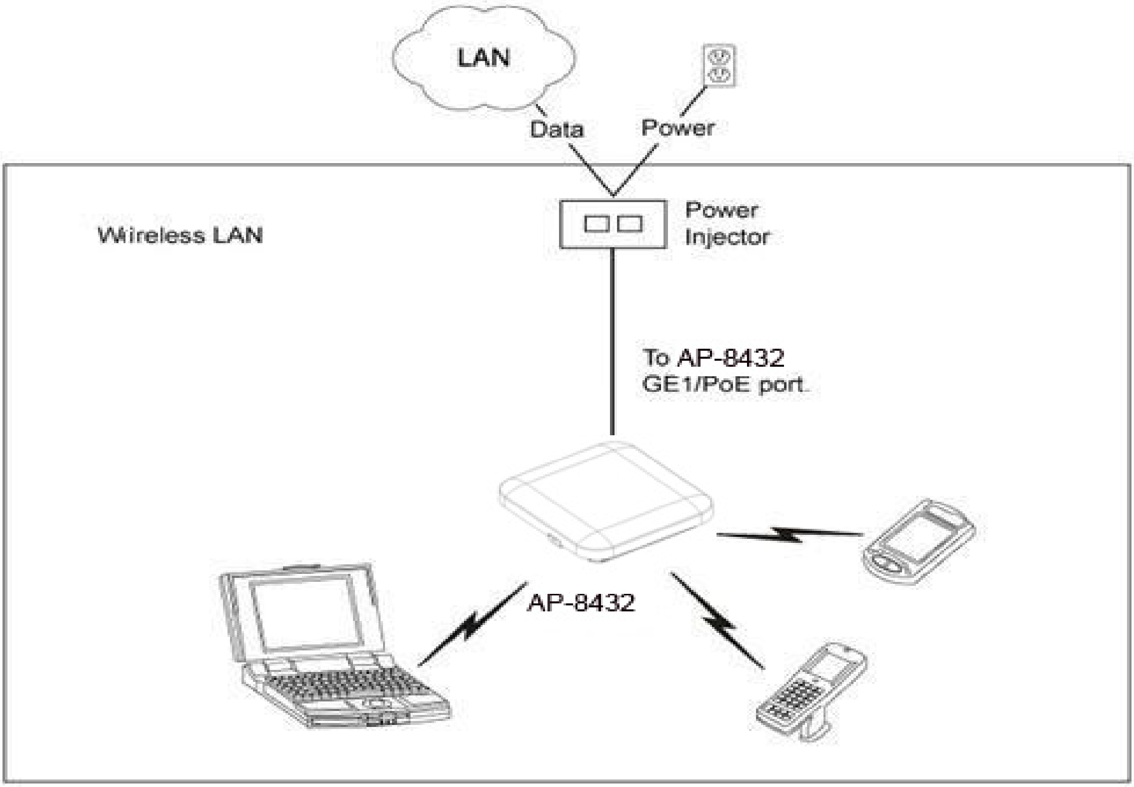
LAN
Data
Power
Wireless LAN
Power Injector
To AP-8432 GE1/PoE port
AP-8432

The Power Injector can be installed free standing, on an even horizontal surface or wall mounted using the Power Injector's wall mounting key holes. The following guidelines should be carefully followed before cabling the Power Injector to an Ethernet source and an Access Point:

- Do not block or cover airflow to the Power Injector.
- Keep the Power Injector away from excessive heat, humidity, vibration and dust.

- The Power Injector isn't a repeater, and does not amplify the Ethernet signal. For optimal performance, ensure the Power Injector is placed as close as possible to the data port.

CAUTION To avoid problematic performance and restarts, disable POE from a wired switch port connected to an Access Point if mid-span *power sourcing equipment* (PSE) is used between the two, regardless of the manufacturer of the switch.

CAUTION Ensure AC power is supplied to the Power Injector using an AC cable with an appropriate ground connection approved for the country of operation.

To install the Power Injector to an Ethernet data source and an Access Point:

1. Connect the Power Injector to an AC outlet (110VAC to 220VAC).
2. Connect an RJ-45 Ethernet cable between the Power Injector **Data & Power Out** connector and the Access Point's GE1/POE port.
3. Connect an RJ-45 Ethernet cable between the network data supply (host) and the Power Injector **Data In** connector.

   Ensure the cable length from the Ethernet source (host) to the Power Injector and Access Point does not exceed 100 meters (333 ft).

   The Power Injector has no On/Off power switch. The Injector receives power and is ready for device connection and operation as soon as AC power is applied. Refer to the *Installation Guide* shipped with the Power Injector for a description of the device's LEDs.

2.5 Wall Mount Instructions

A wall mount deployment requires hanging the AP-8432 with the provided mounting bracket and two screws. The AP-8432 can be mounted on to any plaster, wood or cement wall surface using the provided mounting bracket.

The hardware required to install the AP-8432 on a wall consists of:

- Two wide-shoulder Phillips pan head self-tapping screws (M3.5 x 0.6 x 23 mm)
- Mounting bracket

Optional customer provided installation tools include:

- Phillips head screw driver, or drill and drill bit

2.5.1 *Wall Mount Procedure - New Installation*

This section describes a new AP-8432 installation with no previous Access Point existing on the intended wall surface.

1. Place the mounting bracket against the wall.
2. Mark the screw hole locations depending on the intended deployment orientation of the unit.

Note • When pre-drilling a hole the recommended hole size is 4mm (0.16in.).

3. At each point, drill a hole in the wall and attach the mounting bracket.

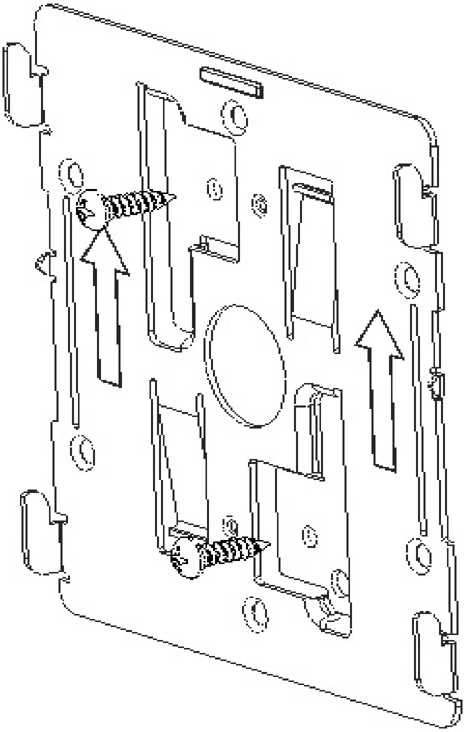

4. Place the Access Point on the mounting bracket.
5. Cable the Access Point using either the Power Injector solution (AP-PSBIAS-2P3-ATR) or the approved AP-8432 power supply (PWR-BGA48V45W0WW).

For Power Injector installations:

a. Connect a RJ-45 CAT5e (or CAT6) Ethernet cable between the Power Injector **Data & Power Out** connector and the Access Point's GE1/POE port.

b. Connect a RJ-45 CAT5e (or CAT6) Ethernet cable between the network data supply (host) and the Power Injector **Data In** connector.

c. Ensure the cable length from the Ethernet source (host) to the Power Injector and Access Point does not exceed 100 meters (333 ft). The Power Injector has no On/Off power switch. The Power Injector receives power as soon as AC power is applied.

For standard power adapter (non Power Injector) and line cord installations:

a. Connect a RJ-45 Ethernet cable between the network data supply (host) and the Access Point's GE1/POE port.

b. Verify the power adapter is correctly rated according to the country of operation.

c. Connect the power supply line cord to the power adapter.

d. Attach the power adapter cable into the power connector on the Access Point.

e. Attach the power supply line cord to a power supply.

6. Verify the Access Point is receiving power by observing the LEDs are lit or flashing. For more information on AP-8432 LED behavior, see *LED Indicators on page 18*.

   The Access Point is ready to configure.

Caution • If not using an AP-PSBIAS-2P3-ATR Power Injector, ensure only the AP-8432's designated power supply (PWR-BGA48V45W0WW) is used to supply power to the Access Point. Using an incorrectly rated power supply could damage the Access Point and void the product warranty. Do not actually connect to the power source until the cabling portion of the installation is complete.

2.6 Suspended Ceiling T-Bar Mount Instructions

Ceiling mount requires holding the AP-8432 up against the T-bar of a suspended ceiling grid and twisting the unit on to the T-bar. If deploying the AP-8432 on a sculpted ceiling T-Bar, the Access Point mounting kit (Part No. KT-135628-01) can optionally be used as well.

1. Install the mounting bracket on the T-bar, then attach the mounting bracket using the mounting slots on the Access Point.

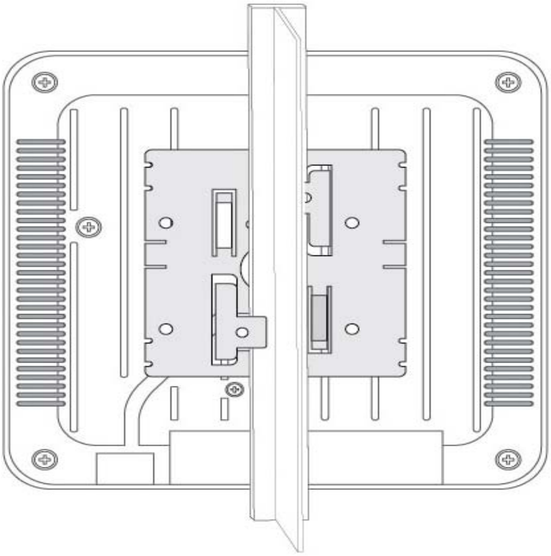

2. Cable the Access Point using either the Power Injector solution (AP-PSBIAS-2P3-ATR) or the approved AP-8432 power supply (PWR-BGA48V45W0WW).

   For Power Injector installations:

   a. Connect a RJ-45 CAT5e (or CAT6) Ethernet cable between the network data supply (host) and the Power Injector **Data In** connector.

   b. Connect a RJ-45 CAT5e (or CAT6) Ethernet cable between the Power Injector **Data & Power Out** connector and the Access Point's GE1/POE port.

   c. Ensure the cable length from the Ethernet source (host) to the Power Injector and Access Point does not exceed 100 meters (333 ft). The Power Injector has no On/Off power switch. The Power Injector receives power as soon as AC power is applied.

For standard power adapter (non Power Injector) and line cord installations:

a. Connect a RJ-45 Ethernet cable between the network data supply (host) and the Access Point's GE1/POE port.
b. Verify the power adapter is correctly rated according the country of operation.
c. Connect the power supply line cord to the power adapter.
d. Attach the power adapter cable into the power connector on the Access Point.
e. Attach the power supply line cord to a power supply.

Caution • If not using an AP-PSBIAS-2P3-ATR Power Injector, ensure only the AP-8432's designated power supply (PWR-BGA48V45W0WW) is used to supply power to the Access Point. Using an incorrectly rated power supply could damage the Access Point and void the product warranty. Do not actually connect to the power source until the cabling portion of the installation is complete.

3. Verify the unit has power by observing the LEDs. For more information on AP-8432 LED behavior, see *LED Indicators on page 18.*
4. Align the bottom of the ceiling T-bar with the back of the Access Point.
5. Orient the Access Point chassis by its length and the length of the ceiling T-bar.
6. Rotate the Access Point chassis 45 degrees clockwise.
7. Push the back of the Access Point chassis on to the bottom of the ceiling T-bar.

8. Rotate the Access Point chassis 45 degrees counter-clockwise. The clips click as they fasten to the T-bar.

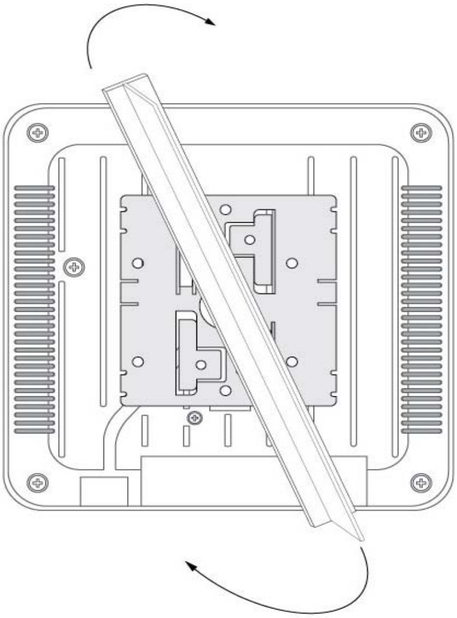

The Access Point is ready to configure.

2.7 LED Indicators

The AP-8432 LED activity indicators are located on the top of the housing and are visible through the enclosure.

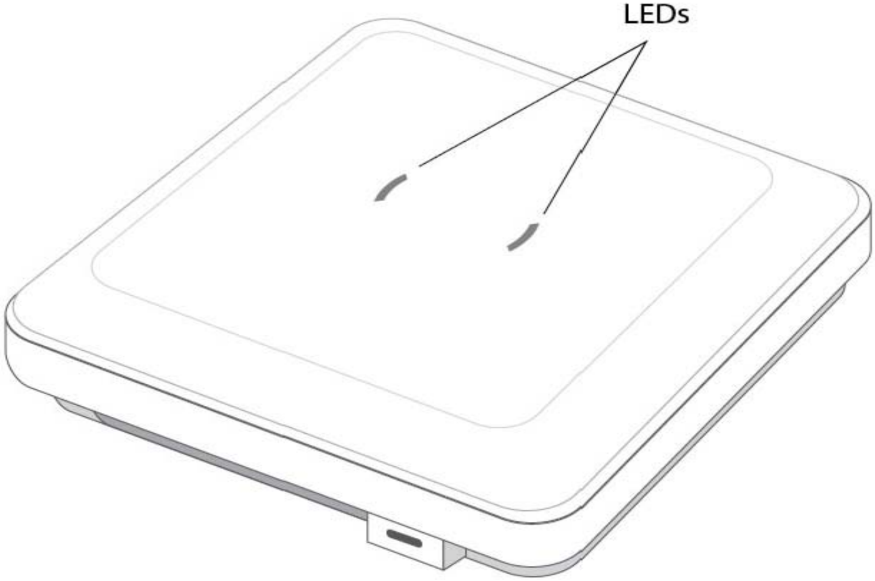

The LEDs display error conditions, and transmission, and network activity for the 5 GHz 802.11ac (amber) radio and the 2.4 GHz 802.11n (green) radio, sensor radio (white) and the BLE radio (blue).

State	***5 GHz Activity LED* (Amber)**	***2.4 GHz Activity LED* (Green)**	***LED* (Blue)**	***LED* (White)**
Firmware Update	On	Off	Off	Off
Normal Operation	• If the radio for this is disabled: turned off. • If there is activity on this band: Blink interval at 2 times per second	• If the radio for this is disabled: turned off. • If there is activity on this band: Blink interval at 2 times per second	N/A	N/A

State	***5 GHz Activity LED* (Amber)**	***2.4 GHz Activity LED* (Green)**	***LED* (Blue)**	***LED* (White)**
Not configured	On	On	N/A	N/A
Locate AP Mode	LEDs blink in an alternating green, amber, blue and white pattern using an irregular blink rate. This LED state in no way resembles normal operating conditions	LEDs blink in an alternating green, amber, blue and white pattern using an irregular blink rate. This LED state in no way resembles normal operating conditions.	LEDs blink in an alternating green, amber, blue and white pattern using an irregular blink rate. This LED state in no way resembles normal operating conditions.	LEDs blink in an alternating green, amber, blue and white pattern using an irregular blink rate. This LED state in no way resembles normal operating conditions
Sensor without SS connected	N/A	N/A	N/A	Off
Sensor with SS connected	N/A	N/A	N/A	On
Air Termination state	N/A	N/A	N/A	Blinking 0.5 second in 1 second duty cycle
BT radio disabled	N/A	N/A	Off	N/A
BT radio enabled (operational)	N/A	N/A	On	N/A

3 Basic Access Point Configuration

Once the AP-8432 is installed and powered on, complete the following steps to get the Access Point up and running and access management functions:

1. The Access Point’s IP address is optimally provided using DHCP. A zero config IP address can also be derived if DHCP resources are unavailable. Using zero config, the last two octets in the IP address are the decimal equivalent of the last two bytes in the Access Point’s hardcoded MAC address.

   For example:

   MAC address - 00:C0:23:00:F0:0A
   Zero-config IP address - 169.254.240.10

   To derive the Access Point’s IP address using its MAC address:

   a. Open the Windows calculator by selecting *Start* > *All Programs* > *Accessories* > *Calculator*. This menu path may vary slightly depending on your version of Windows.

   b. With the Calculator displayed, select *View* > *Scientific*. Select the **Hex** radio button.

   c. Enter a hex byte of the Access Point’s MAC address. For example, F0.

   d. Select the **Dec** radio button. The calculator converts F0 into 240. Repeat this process for the last Access Point MAC address octet.

2. Point the Web browser to the Access Point’s IP address. The following login screen displays:

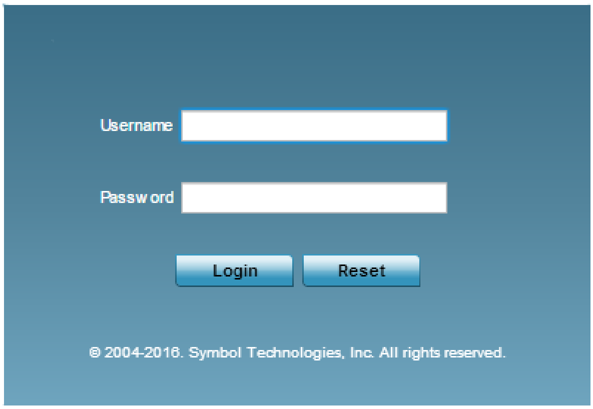

© 2004-2016. Symbol Technologies, Inc. All rights reserved.

3. Enter the default username *admin* in the **Username** field.
4. Enter the default password *admin123* in the **Password** field.

5. Click the **Login** button to load the management interface.

Note • When logging in for the first time, you’re prompted to change the password to enhance device security in subsequent logins.

Note • If you get disconnected when running the wizard, you can connect again with the Access Point’s actual IP address (once obtained) and resume the wizard.

If this is the first time the management interface has been accessed, the Initial Setup Wizard automatically displays.

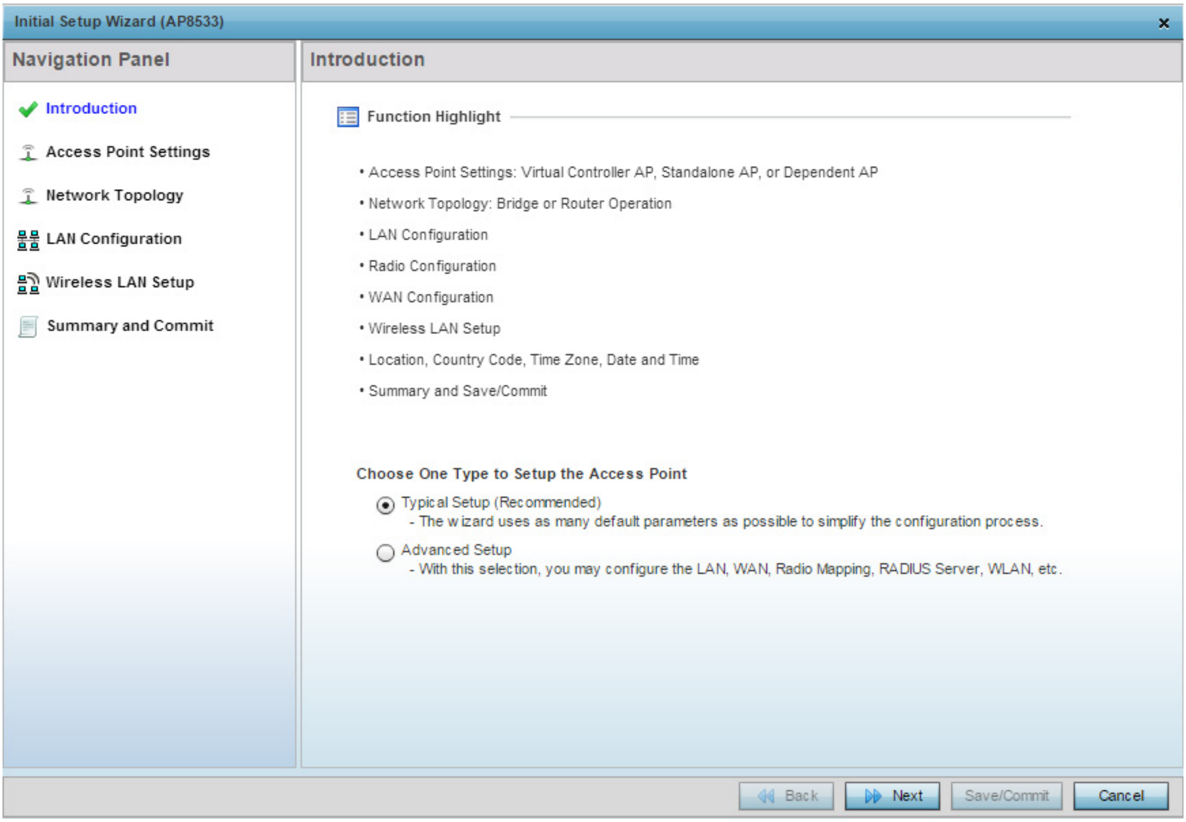

Initial Setup Wizard (AP8533)

×
Navigation Panel
✓ Introduction
Access Point Settings
Network Topology
LAN Configuration
Wireless LAN Setup
Summary and Commit

Introduction

Function Highlight

- Access Point Settings: Virtual Controller AP, Standalone AP, or Dependent AP
- Network Topology: Bridge or Router Operation
- LAN Configuration
- Radio Configuration
- WAN Configuration
- Wireless LAN Setup
- Location, Country Code, Time Zone, Date and Time
- Summary and Save/Commit

Choose One Type to Setup the Access Point

● Typical Setup (Recommended)
- The wizard uses as many default parameters as possible to simplify the configuration process.

○ Advanced Setup
- With this selection, you may configure the LAN, WAN, Radio Mapping, RADIUS Server, WLAN, etc.

Back
Next
Save/Commit
Cancel

Note • The Initial Setup Wizard displays the same pages and content for each Access Point type supported. The only difference being the number of radios configurable by Access Point, as models vary.

The Introduction screen displays the various actions that can be performed using the wizard under the **Function Highlight** field.

Use the **Choose One type to Setup the Access Point** field options to select the type of wizard to run. The **Typical Setup** is the recommended wizard. This wizard uses the default parameters for most of the configuration and sets a working network with the least amount of manual configuration.

The **Advanced Setup** wizard is for administrators who prefer more control over the different configuration parameters. A few more configuration screens are available for customization when the Advanced Setup wizard is used.

The first page of the *Initial Setup Wizard* displays the **Navigation Panel** and **Function Highlights** for the configuration activities comprising the Access Point's initial setup. This page also displays options to select the typical or advanced mode for the wizard.

The Navigation Panel for the Typical Setup Wizard displays the basic configuration options.

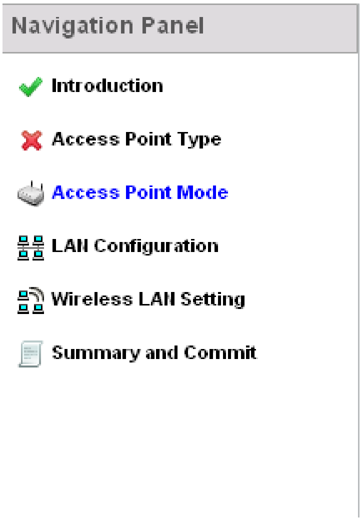

A green checkmark to the left of an item in the **Navigation Panel** defines the task as having its minimum required configuration set correctly. A red X defines a task as still requiring at least one parameter be defined correctly.

6. Select **Save/Commit** within each page to save the updates made to that page's configuration. Select **Next** to proceed to the next page listed in the Navigation Panel without saving your updates.

Note • While you can navigate to any page in the navigation panel, you cannot complete the Initial AP Setup Wizard until each task in the Navigation Panel has a green checkmark.

For the purposes of this guide, use the **Typical Setup (Recommended)** option to simplify the process of getting the Access Point up and running quickly with a minimum number of changes to the Access Point’s default configuration.

For information on using the Access Point’s Advanced Setup option, refer to the *WiNG Access Point System Reference Guide* to familiarize yourself with the feature set supported by the WiNG operating system. The guide is available at www.zebra.com/support.

To configure the Access Point using the Typical Setup Wizard:

7. Select **Typical Setup** from the **Choose One type to Setup the Access Point** field on the Initial Setup Wizard.
8. The Typical Setup Wizard displays the **Access Point Settings** screen to define the Access Point's Standalone versus Virtual Controller AP functionality. This screen also enables selection of the country of operation for the Access Point.

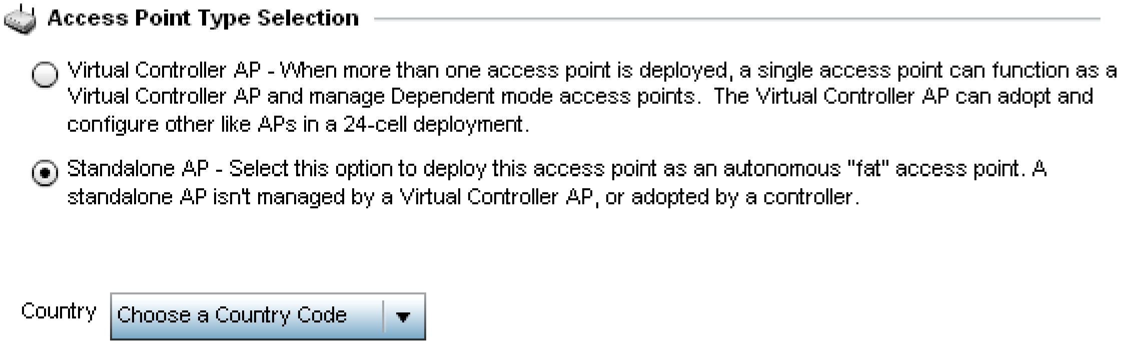

Access Point Type Selection

○ Virtual Controller AP - When more than one access point is deployed, a single access point can function as a Virtual Controller AP and manage Dependent mode access points. The Virtual Controller AP can adopt and configure other like APs in a 24-cell deployment.

● Standalone AP - Select this option to deploy this access point as an autonomous "fat" access point. A standalone AP isn't managed by a Virtual Controller AP, or adopted by a controller.

Country: Choose a Country Code ▾

Note • The professional installer should refer to the *WiNG Access Point System Reference Guide* available at www.zebra.com/support for detailed information on how to set the Access Point's transmit power, antenna gain and channel in respect to the deployment country's unique regulatory requirements.

9. Select an **Access Point Type** from the following options:
   - *Virtual Controller AP* - When more than one Access Point is deployed, a single Access Point can function as a Virtual Controller AP. Up to 24 Access Points can be connected to, and managed by, a single Virtual Controller AP of the same Access Point type. These connected Access Points must be the same type as the Virtual Controller AP.
   - *Standalone AP* - Select this option to deploy this Access Point as an autonomous fat Access Point. A Standalone AP isn't managed by a Virtual Controller AP, or adopted by a controller.

Note • If wanting to adopt the Access Point to a controller or service platform, use the controller or service platform's resident UI to connect to the Access Point, provision its configuration and administrate the Access Point's configuration.

Note • If designating the Access Point as a Standalone AP, its recommended the Access Point's UI be used exclusively to define its device configuration, and not the CLI. The CLI provides the ability to define more than one profile and the UI does not. Consequently, the two interfaces cannot be used collectively to manage profiles without encountering problems.

10. Select the **Country Code** of the country where the Access Point is deployed. Selecting a proper country is a critical task while configuring the Access Point, as it defines the correct channels of operation and ensures compliance to the regulations of the selected country. This field is only available for the Typical Setup Wizard.
11. Select **Next** to set the Access Point's network mode.

12. The Typical Setup Wizard displays the **Network Topology** screen to define how the Access Point manages network traffic.

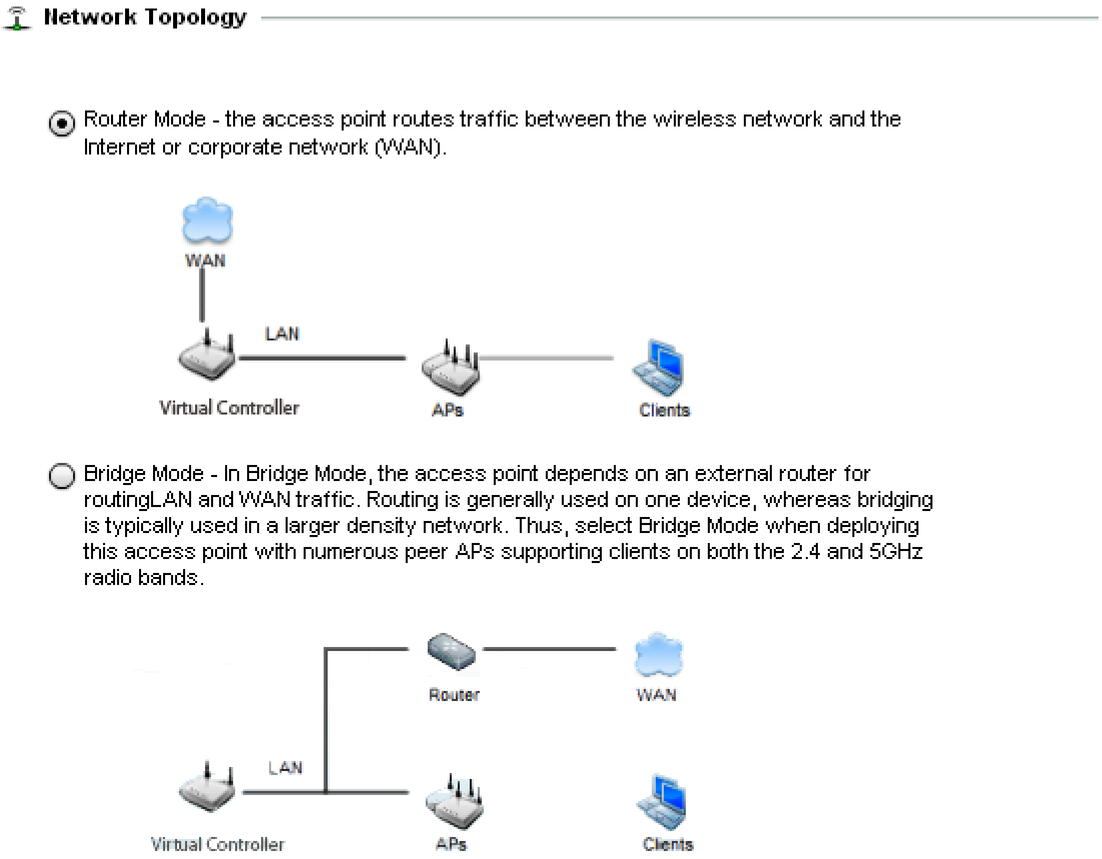

Network Topology

● Router Mode - the access point routes traffic between the wireless network and the Internet or corporate network (WAN).

○ Bridge Mode - In Bridge Mode, the access point depends on an external router for routingLAN and WAN traffic. Routing is generally used on one device, whereas bridging is typically used in a larger density network. Thus, select Bridge Mode when deploying this access point with numerous peer APs supporting clients on both the 2.4 and 5GHz radio bands.

13. Select an Access Point Mode from the available options.
    - *Router Mode* - In Router Mode, the Access Point routes traffic between the local network (LAN) and the Internet or external network (WAN). Router mode is recommended in a deployment supported by just a single Access Point.
    - *Bridge Mode* - In Bridge Mode, the Access Point depends on an external router for LAN and WAN traffic. Routing is generally used on one device, whereas bridging is typically used in a larger density network. Select Bridge Mode when deploying this Access Point with numerous peer Access Points supporting clients on both the

2.4GHz and 5GHz radio bands.

Note • When Bridge Mode is selected, WAN configuration cannot be performed and the Typical Setup Wizard does not display the WAN configuration screen.

14. Select **Next**. The Typical Setup Wizard displays the **LAN Configuration** screen to set the Access Point's LAN interface configuration.

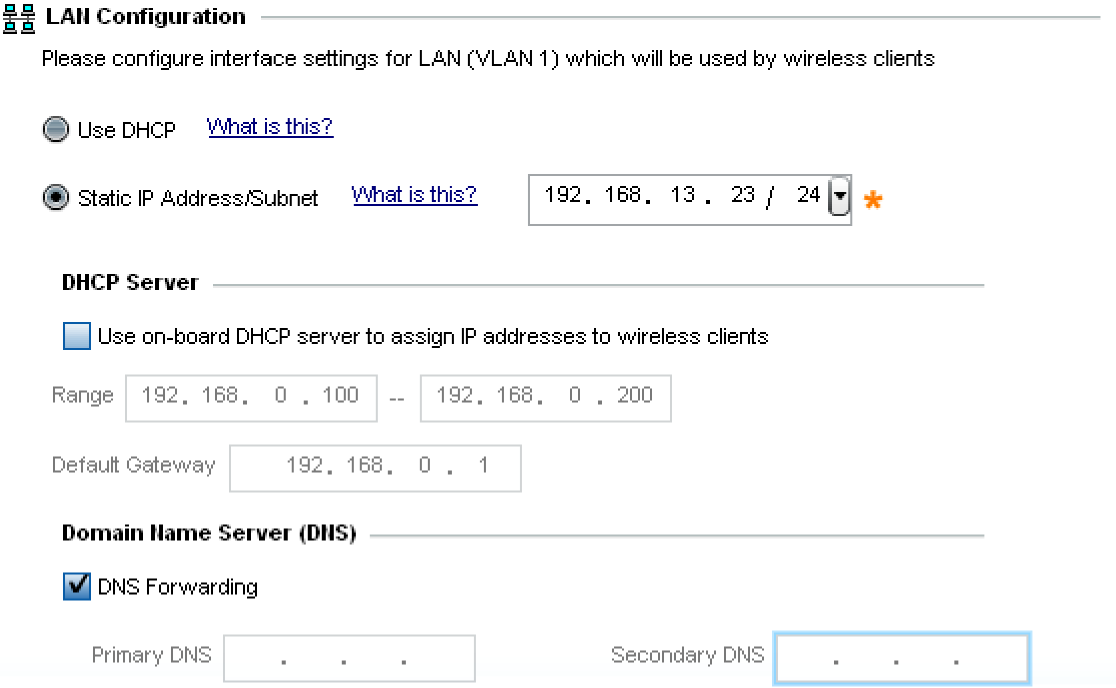

LAN Configuration

Please configure interface settings for LAN (VLAN 1) which will be used by wireless clients

○ Use DHCP

● Static IP Address/Subnet 192. 168. 13 . 23 / 24 *

DHCP Server

☐ Use on-board DHCP server to assign IP addresses to wireless clients

Range 192. 168. 0 . 100 -- 192. 168. 0 . 200

Default Gateway 192. 168. 0 . 1

Domain Name Server (DNS)

☑ DNS Forwarding

Primary DNS . . .

Secondary DNS . . .

15. Set the following DHCP and Static IP Address/Subnet information for the LAN interface:
    - *Use DHCP* - Select the checkbox to enable an automatic network address configuration using the Access Point’s DHCP server.
    - *Static IP Address/Subnet* - Enter an IP Address and a subnet for the Access Point's LAN interface. If *Use DHCP* is selected, this field is not available. When selecting this option, define the following *DHCP Server* and *Domain Name Server (DNS)* resources, as those

fields will become enabled on the bottom portion of the screen.

- *Use on-board DHCP server to assign IP addresses to wireless clients* - Select the checkbox to enable the Access Point’s DHCP server to provide IP and DNS information to requesting clients on the LAN interface.
- *Range* - Enter a starting and ending IP Address range for client assignments on the LAN interface. Avoid assigning IP addresses from x.x.x.1 - x.x.x.10 and x.x.x.255, as they are often reserved for standard network services. This is a required parameter.
- *Default Gateway* - Define a default gateway address for use with the default gateway. This is a required parameter.
- *DNS Forwarding* - Select this option to allow a DNS server to translate domain names into IP addresses. If this option is not selected, a primary and secondary DNS resource must be specified. DNS forwarding is useful when a request for a domain name is made but the DNS server, responsible for converting the name into its corresponding IP address, cannot locate the matching IP address.
- *Primary DNS* - Enter an IP Address for the main Domain Name Server providing DNS services for the Access Point's LAN interface.
- *Secondary DNS* - Enter an IP Address for the backup Domain Name Server providing DNS services for the Access Point's LAN interface.

16. Select **Next.** The Typical Setup Wizard displays the **Wireless LAN Setup** screen to set the an Access Point's WLAN 1 and WLAN 2.

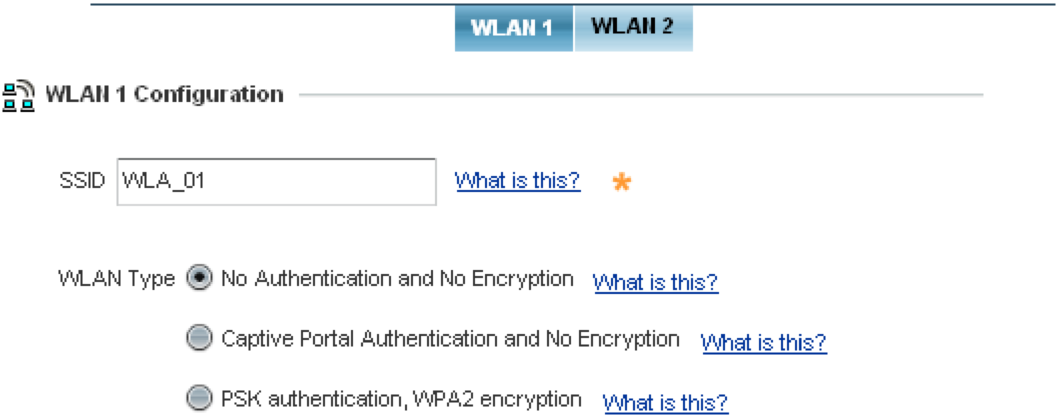

SSID WLA_01 What is this? *

WLAN Type
● No Authentication and No Encryption What is this?
○ Captive Portal Authentication and No Encryption What is this?
○ PSK authentication, WPA2 encryption What is this?

17. Set the following WLAN1 Configuration parameters:
    - *SSID* - Configure the SSID for the WLAN.
    - *WLAN Type* - Configure encryption and authentication settings to protect the data and user integrity of WLAN 1.
    - *No Authentication and No Encryption* - Configures a network without any user authentication or data encryption. This means any data transmitted through the network is in plain text. Any device between end points can see the information transmitted. This is the least secure of all network configurations.
    - *Captive Portal Authentication and No Encryption* - Uses a RADIUS server to authenticate users before allowing them on to the network. Once on the network, no encryption is used for the data transmitted through the network. Select this option to use a Web page (either internally or externally hosted) to authenticate users before access is granted to the network.
    - *PSK authentication, WPA2 encryption* - Configures a network that uses PSK authentication and WPA2 encryption. Select this option to implement a pre-shared key that must be correctly shared between the Access Point and requesting clients.
18. Select **Next**. The Typical Setup Wizard displays the **RADIUS Server Configuration** screen if required.

    Otherwise, the *Typical Setup Wizard* displays the **Summary and Commit** screen.

19. Use the **Radius Server Configuration** screen to configure the users for the onboard RADIUS server. Use the screen to add, modify and remove RADIUS users.

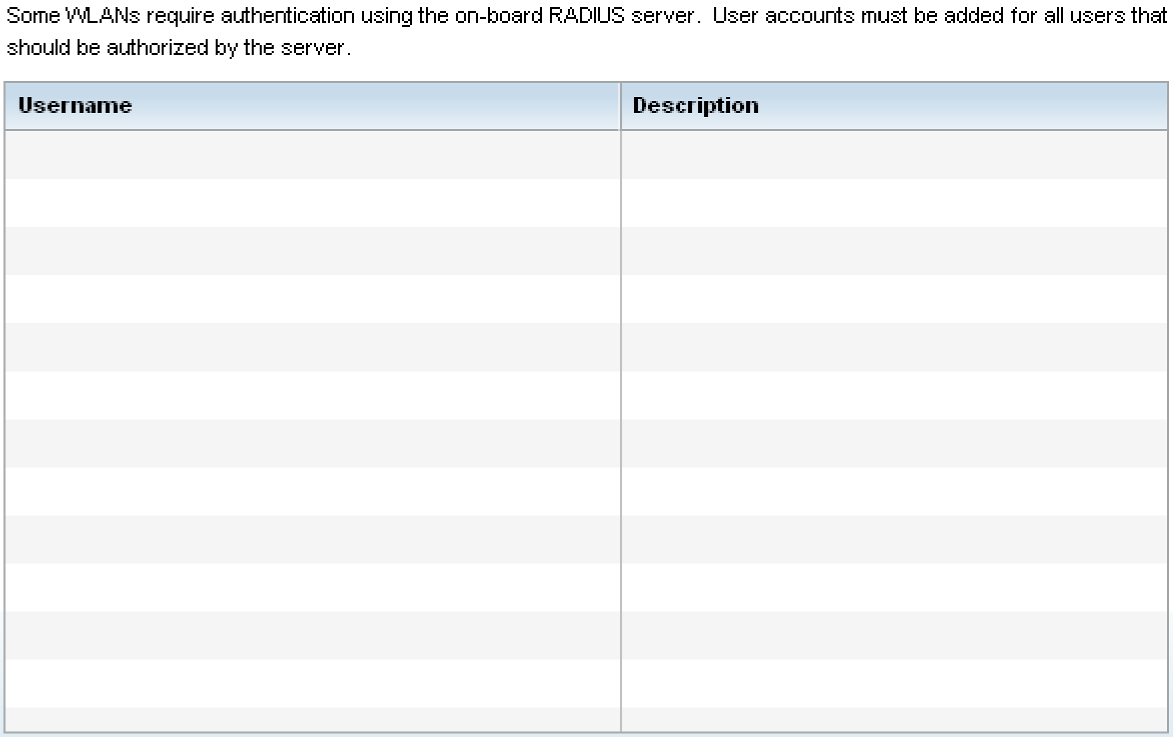

Some WLANs require authentication using the on-board RADIUS server. User accounts must be added for all users that should be authorized by the server.

Username	Description

20. Select **Add User** to display the dialog to enter user information to add to the RADIUS server user database.

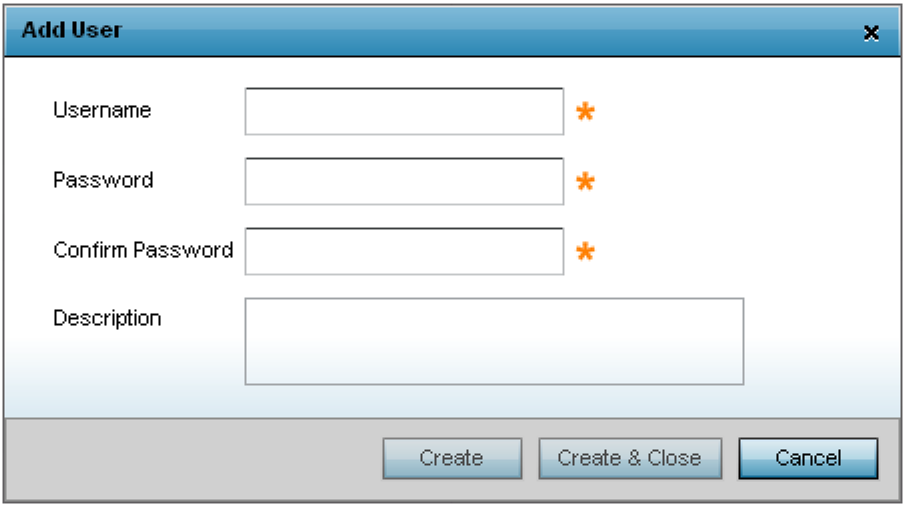

Add User
×
Username *
Password *
Confirm Password *
Description
Create
Create & Close
Cancel

21. Enter the following user information:
    - *Username* - Provide a user name to authenticate the user.
    - *Password* - Provide a password to authenticate the user.
    - Confirm Password - Confirm the password by entering the same password entered in the Password field.
    - Description - Provide a description to identify the user created in the RADIUS server database.
22. Select **Create** to create the entry in the RADIUS server database and add another user. **Select Create & Close** to create an entry in the RADIUS server database and close the Add User dialog.
23. Select **Modify User** within the RADIUS Server Configuration screen to modify information for an existing user.

Note • The *Username* cannot be modified with this dialog.

24. Select **Delete User** on the RADIUS Server Configuration screen to remove information for an existing user. Select **Yes** to verify the removal.
25. Select **Cancel** to revert to the last saved configuration.

26. Select **Next**. The Typical Setup Wizard displays the **Summary and Commit** screen to summarize the screens (pages) and settings updated using the Typical Setup Wizard.

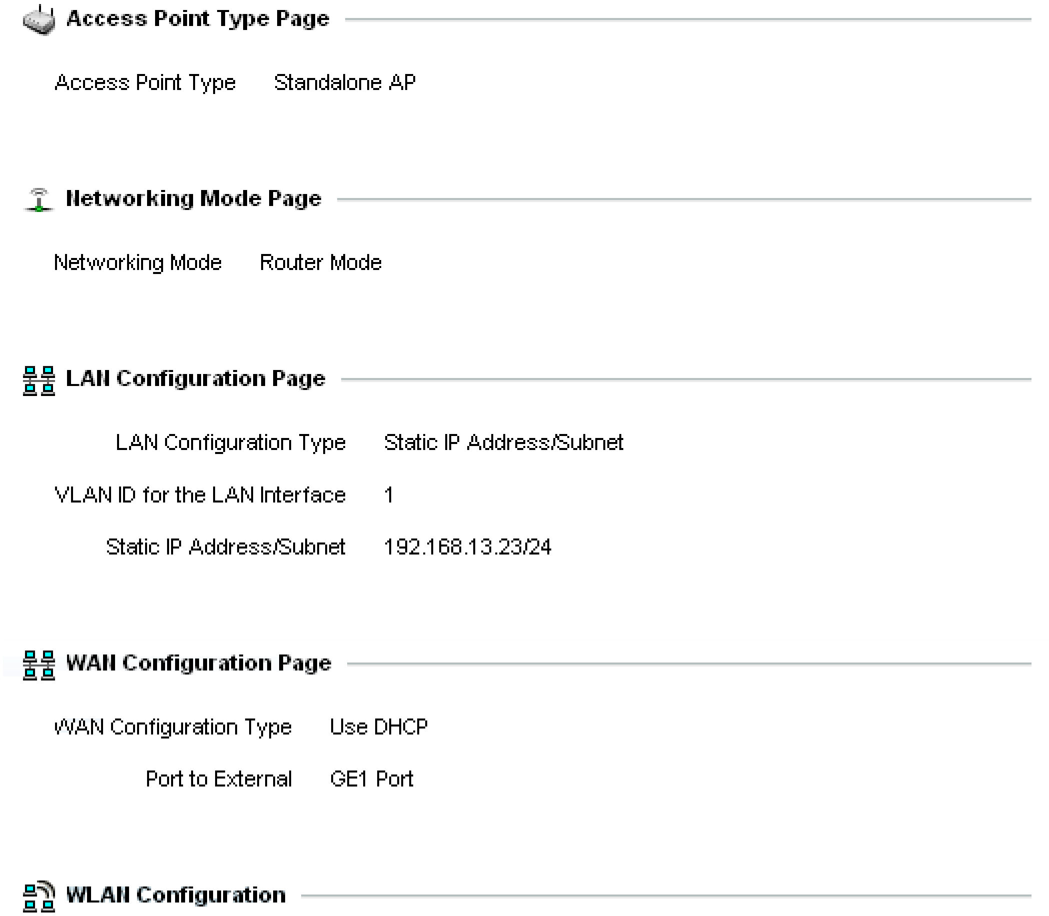

Access Point Type Page

Access Point Type	Standalone AP

Networking Mode Page

Networking Mode	Router Mode

LAN Configuration Page

LAN Configuration Type	Static IP Address/Subnet
VLAN ID for the LAN Interface	1
Static IP Address/Subnet	192.168.13.23/24

WAN Configuration Page

WAN Configuration Type	Use DHCP
Port to External	GE1 Port

WLAN Configuration

No user intervention or additional settings are required. Its an additional means of validating the Access Point's updated configuration before it's deployed. However, if a screen displays settings not intended as part of the initial configuration, then any screen can be selected again from within the Navigation Panel and its settings modified accordingly.

If the configuration displays as intended, select **Save/Commit** to implement these settings to the Access Point's configuration. If additional changes are warranted based on the summary, either select the target page from the **Navigational Panel**, or use the **Back** and **Next** buttons to scroll to the target screen.

4 AP-8432 Access Point Specifications

4.1 Electrical Characteristics

An AP-8432 Access Point has the following electrical characteristics:

Operating Current & Voltage	48VDC, 0.625A (AUX input voltage) 48VDC PWR-BGA48V45W0WW Power Supply 48VDC, 0.53A (POE) 802.3at AP-PSBIAS-2P3-ATR Power Injector

4.2 Physical Characteristics

An AP-8432 Access Point has the following physical characteristics:

Dimensions	8.25 in. L x 8.25 in. W x 1.8 in. H 210 mm L x 210 mm W x 46 mm H
Weight	3.0 lbs/1.37 kg
Operating Temperature	32° F to 140° F/0° C to 50° C
Storage Temperature	-40° F to 158° F/-40° C to 70° C
Operating Humidity	95% RH non-condensing
Operating Altitude (maximum)	13,000 ft @ 28C
Storage Altitude (maximum)	30,000 ft @ 12C
Electrostatic Discharge	ESD to ±12KV air and ±8KV contact

4.3 Radio Characteristics

The AP-8432 Access Point has the following radio characteristics:

Data Rates Supported	802.11b/g: 1,2,5.5,11,6,9,12,18,24,36,48 and 54 Mbps 802.11a: 6,9,12,18,24,36,48, and 54 Mbps 802.11n: MCS 0-31 up to 600Mbps 802.11ac: MCS 0-9 up to 1.733Gbps
Wireless Medium	*Direct Sequence Spread Spectrum* (DSSS) *Orthogonal Frequency Division Multiplexing* (OFDM) *Spatial multiplexing* (MIMO)
Network Standards	IEEE 802.11a/b/g/n/ac, MU-MIMO 802.11d and 802.11i WPA2 WMM and WMM-UAPSD
Transmit Power Adjustment	1dB increments

5 Regulatory Information

5.1 Regulatory Information

This guide applies to the following Model Numbers: AP-8432I.

All Zebra devices are designed to be compliant with the rules and regulations in the locations they are sold and will be labeled as required.

Local language translations are available at the following Website: *www.zebra.com/support*

Any changes or modifications to Zebra equipment, not expressly approved by Zebra could void the user's authority to operate the equipment.

Zebra devices are professionally installed, the Radio Frequency Output Power will not exceed the maximum allowable limit for the country of operation.

Antennas: Use only the supplied or an approved replacement antenna. Unauthorized antennas, modifications, or attachments could cause damage and may violate regulations.

This device is only to be used with a Zebra Wireless Switch.

For use only with Zebra approved and UL Listed mobile computers, Zebra approved, and UL Listed/Recognized battery packs.

Caution:

Only use Zebra approved and UL Listed accessories, battery packs, and battery chargers.

Do NOT attempt to charge damp/wet mobile computers or batteries. All components must be dry before connecting to an external power source.

Declared maximum operating temperature: 50°C.

5.1.1 Bluetooth Wireless Technology

This is an approved Bluetooth® product. For more information or to view the End Product Listing, please visit *https://www.bluetooth.org/tpg/listings.cfm*.

5.2 Wireless Device Country Approvals

Note: This section is only applicable to WW/WR/EU configurations.

Regulatory markings subject to certification are applied to the device signifying the radio(s) is/are approved for use in the following countries and continents: United States, Canada, Japan, China, South Korea, Australia, and Europe.

Please refer to the *Declaration of Conformity* (DoC) for details of other country markings. This is available at: *www.zebra.com/doc*

Note: Europe includes Austria, Belgium, Bulgaria, Croatia, Czech Republic, Cyprus, Denmark, Estonia, Finland, France, Germany, Greece, Hungary, Iceland, Ireland, Italy, Latvia, Liechtenstein, Lithuania, Luxembourg, Malta, Netherlands, Norway, Poland, Portugal, Romania, Slovak Republic, Slovenia, Spain, Sweden, Switzerland, and the United Kingdom.

Caution:

Operation of the device without regulatory approval is illegal.

5.2.1 Country Selection

Select only the country in which the device will be used. Any other selection will make the operation of this device illegal.

Country Roaming

This device incorporates the International Roaming feature (IEEE802.11d) which will ensure the product operates on the correct channels for the particular country of use.

5.2.2 Frequency of Operation – IC

5 GHz Only

Industry Canada Statement:

Caution: The device for the band 5150-5250 MHz is only for indoor usage to reduce potential for harmful interference to co-Channel mobile satellite systems. High power radars are allocated as primary users (meaning they have priority) of 5250-5350 MHz and 5650-5850 MHz and these radars could cause interference and/or damage to LE-LAN devices.

Avertissement: Le dispositif fonctionnant dans la bande 5150-5250 MHz est réservé uniquement pour une utilisation à l'intérieur afin de réduire les risques de brouillage préjudiciable aux systèmes de satellites mobiles utilisant les mêmes canaux.

Les utilisateurs de radars de haute puissance sont désignés utilisateurs principaux (c.-à-d., qu'ils ont la priorité) pour les bands 5250-5350 MHz et 5650-5850 MHz et que ces radars pourraient causer du brouillage et/ou des dommages aux dispositifs LAN-EL.

2.4 GHz Only

The available channels for 802.11bg operation in the US are Channels 1 to 11. The range of channels is limited by firmware.

5.3 Warnings for Use of Wireless Devices

Caution: Please observe all warning notices with regard to the usage of wireless devices.

5.3.1 Potentially Hazardous Atmospheres - Vehicle Installation

You are reminded of the need to observe restrictions on the use of radio devices in fuel depots, chemical plants etc. and areas where the air contains chemicals or particles (such as grain, dust, or metal powders).

5.3.2 Potentially Hazardous Atmospheres - Fixed Installations

You are reminded of the need to observe restrictions on the use of radio devices in fuel depots, chemical plants etc. and areas where the air contains chemicals or particles such as grain, dust, or metal powders.

5.3.3 Safety in Aircraft

Switch off your wireless device whenever you are instructed to do so by airport or airline staff. If your device offers a 'flight mode' or similar feature, consult airline staff as to its use in flight.

5.3.4 Safety in Hospitals

Wireless devices transmit radio frequency energy and may affect medical electrical equipment. When installed adjacent to other equipment, it is advised to verify that the adjacent equipment is not adversely affected.

Wireless devices transmit radio frequency energy and may affect medical electrical equipment.

Wireless devices should be switched off wherever you are requested to do so in hospitals, clinics, or healthcare facilities. These requests are designed to prevent possible interference with sensitive medical equipment.

Wireless devices transmit radio frequency energy and may affect medical electrical equipment. When installed adjacent to other equipment, it is advised to verify that the adjacent equipment is not adversely affected.

Pacemakers

Pacemaker manufacturers recommended that a minimum of 15cm (6 inches) be maintained between a handheld wireless device and a pacemaker to avoid potential interference with the pacemaker. These recommendations are consistent with independent research and recommendations by Wireless Technology Research.

Persons with Pacemakers:

- Should ALWAYS keep the device more than 15cm (6 inches) from their pacemaker when turned ON.
- Should not carry the device in a breast pocket.
- Should use the ear furthest from the pacemaker to minimize the potential for interference.
- If you have any reason to suspect that interference is taking place, turn OFF your device.

Other Medical Devices

Please consult your physician or the manufacturer of the medical device, to determine if the operation of your wireless product may interfere with the medical device.

5.4 RF Exposure Guidelines

5.4.1 Safety Information

Reducing RF Exposure - Use Properly

Only operate the device in accordance with the instructions supplied.

5.4.2 International

The device complies with internationally recognized standards covering human exposure to electromagnetic fields from radio devices. For information on “International” human exposure to electromagnetic fields refer to the *Declaration of Conformity* (DoC) at *www.zebra.com/doc.*

5.4.3 EU

Remote and Standalone Antenna Configurations

To comply with EU RF exposure requirements, antennas that are mounted externally at remote locations or operating near users at stand-alone desktop of similar configurations must operate with a minimum separation distance of 40cm from all persons.

5.4.4 US and Canada

Co-located statement

To comply with FCC RF exposure compliance requirements, the antenna used for this transmitter must not be co-located or operating in conjunction with any other transmitter/antenna except those already approved in this filling.

To satisfy US and Canadian RF exposure requirements, a transmitting device must operate with a minimum separation distance of 40cm or more from a person's body.

Pour satisfaire aux exigences Américaines et Canadiennes d'exposition aux radiofréquences, un dispositif de transmission doit fonctionner avec une distance de séparation minimale de 40cm ou plus de corps d'une personne.

Radiation Exposure Statement

This equipment complies with IC radiation exposure limits set forth for an uncontrolled environment. This equipment should be installed and operated with minimum distance 40cm between the radiator and your body.

NOTE IMPORTANTE: (Pour l'utilisation de dispositifs mobiles)

Déclaration d'exposition aux radiations:

Cet équipement est conforme aux limites d'exposition aux rayonnements IC établies pour un environnement non contrôlé. Cet équipement doit être installé et utilisé avec un minimum de 40cm de distance entre la source de rayonnement et votre corps.

Remote and Standalone Antenna Configurations

To comply with FCC RF exposure requirements, Antennas that are mounted externally must be professionally installed at a fixed location and operate with a minimum distance of 40cm from all persons.

To comply with FCC Antenna requirements, the Antenna must be adjusted such that the RF emission lobes are below 30 degrees elevation.

5.5 Power Supply

This device must be powered from a 802.3af or 802.3at compliant power source which has been certified by the appropriate agencies, or by a Zebra approved UL LISTED ITE (IEC/EN 60950-1, LPS/SELV) power supply with electrical ratings: Output 48 Vdc 45 watts with a maximum ambient temperature rating of at least 50 degrees C. The use of an alternative power supply will invalidate any approvals given to this unit and may be dangerous.

5.6 Radio Frequency Interference Requirements—FCC

Tested to comply
with FCC Standards
FOR HOME OR OFFICE USE

This equipment has been tested and found to comply with the limits for a Class B digital device, pursuant to Part 15 of the FCC rules. These limits are designed to provide reasonable protection against harmful interference in a residential installation. This equipment generates, uses and can radiate radio frequency energy and, if not installed and used in accordance with the instructions, may cause harmful interference to radio communications. However there is no guarantee that interference will not occur in a particular installation. If this equipment does cause harmful interference to radio or television reception, which can be determined by turning the equipment off and on, the user is encouraged to try to correct the interference by one or more of the following measures:

- Reorient or relocate the receiving antenna
- Increase the separation between the equipment and receiver
- Connect the equipment into an outlet on a circuit different from that to which the receiver is connected
- Consult the dealer or an experienced radio/TV technician for help.

5.6.1 Radio Transmitters (Part 15)

This device complies with Part 15 of the FCC Rules. Operation is subject to the following two conditions: (1) this device may not cause harmful interference, and (2) this device must accept any interference received, including interference that may cause undesired operation.

5.6.2 Radio Frequency Interference Requirements - Canada

CAN ICES-3 (B)/NMB-3(B)

Radio Transmitters

For RLAN Devices:

The use of 5 GHz RLAN’s, for use in Canada, have the following restrictions:

- Restricted Band 5.60 – 5.65 GHz

IC statement

This device complies with Industry Canada license-exempt RSS standard(s). Operation is subject to the following two conditions: (1) this device may not cause interference, and (2) this device must accept any interference, including interference that may cause undesired operation of the device.

Le présent appareil est conforme aux CNR d'Industrie Canada applicables aux appareils radio exempts de licence. L'exploitation est autorisée aux deux conditions suivantes : (1) l'appareil ne doit pas produire de brouillage, et (2) l'utilisateur de l'appareil doit accepter tout brouillage radioélectrique subi, même si le brouillage est susceptible d'en compromettre le fonctionnement

Label Marking: The Term "IC:" before the radio certification only signifies that Industry Canada technical specifications were met

In accordance with the regulations of Industry Canada, this radio transmitter can operate with an antenna of a type and a maximum gain (or lower) approved for the transmitter by Industry Canada. With the aim of reducing the risk of radio interference to other users, the chosen antenna type and its gain should be selected so that the equivalent isotropically radiated power (e.i.r.p.) does not exceed the intensity necessary for the establishment of a satisfactory connection.

Conformément à la réglementation d'Industrie Canada, le présent émetteur radio peut fonctionner avec une antenne d'un type et d'un gain maximal (ou inférieur) approuvé pour l'émetteur par Industrie Canada. Dans le but de réduire les risques de brouillage radioélectriqueà l'intention des autres utilisateurs, il faut choisir le type d'antenne et son gain de sorte que la puissance isotrope rayonnée équivalente (p.i.r.e.) ne dépasse pas l'intensité nécessaire àl'établissement d'une communication satisfaisante.

In compliance with respective local regulatory law, AP software provides professional installers the option to configure the antenna type and antenna gain for approved antennas.

This radio transmitter (AP-8432) has been approved by Industry Canada to operate with the antenna types listed below and having a maximum gain allowable and the impedance required for each type of antenna. The antenna types not included in this list, or whose gain is higher than the maximum gain indicates, are strictly prohibited for the operation of the transmitter.

Refer to *AP-8432 Antennas on page 7* for a listing of the 2.4 GHz and 5 GHz antennas initially approved for use with AP-8432 Access Points.

Le présent émetteur radio (AP-8432) a été approuvé par Industrie Canada pour fonctionner avec les types d'antenne énumérés ci-dessous et ayant un gain admissible maximal et l'impédance requise pour chaque type d'antenne. Les types d'antenne non inclus dans cette liste ou dont le gain est supérieur au gain maximal indiqué, sont strictement interdits pour l'exploitation de l'émetteur.

5.7 CE Marking and European Economic Area (EEA)

WARNING: This is a Class B product. In a domestic environment this product may cause radio interference in which case the user may be required to take adequate measures.

The use of 2.4GHz RLAN’s, for use through the EEA, have the following restrictions:

- Maximum radiated transmit power of 100 mW EIRP in the frequency range 2.400 -2.4835 GHz.

Bluetooth® Wireless Technology for use through the EEA has the following restrictions:

- Maximum radiated transmit power of 100 mW EIRP in the frequency range 2.400 -2.4835 GHz.

5.8 Statement of Compliance

Zebra hereby, declares that this device is in compliance with the essential requirements and other relevant provisions of Directive 1999/5/EC.
A Declaration of Conformity may be obtained from *www.zebra.com/doc*.

5.9 Japan (VCCI) - Voluntary Control Council for Interference

Class B ITE

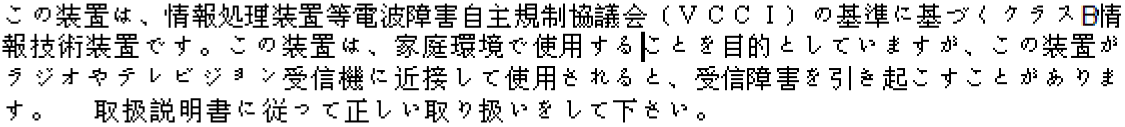

この装置は、情報処理装置等電波障害自主規制協議会（ＶＣＣＩ）の基準に基づくクラスB情報技術装置です。この装置は、家庭環境で使用することを目的としていますが、この装置がラジオやテレビジョン受信機に近接して使用されると、受信障害を引き起こすことがあります。　取扱説明書に従って正しい取り扱いをして下さい。

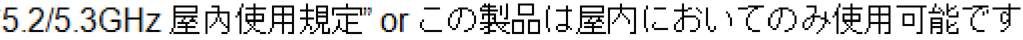

5.2/5.3GHz 屋内使用規定" or この製品は屋内においてのみ使用可能です

5.10 Korea Warning Statement for Class B ITE

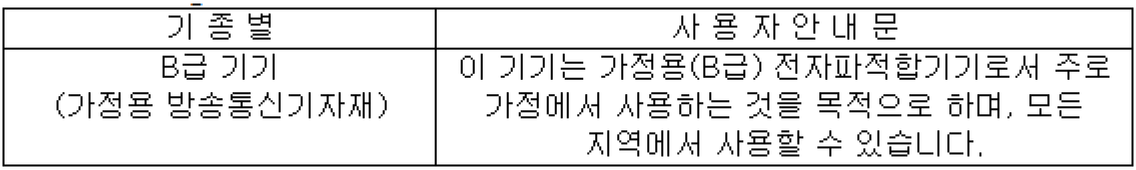

기 종 별	사 용 자 안 내 문
B급 기기 (가정용 방송통신기자재)	이 기기는 가정용(B급) 전자파적합기기로서 주로 가정에서 사용하는 것을 목적으로 하며, 모든 지역에서 사용할 수 있습니다.

5.11 Other Countries

All 2.4GHz and 5GHz Wireless Devices:

Australia

Use of 5GHz RLAN's in Australia is restricted in the following band 5.50 – 5.65GHz.

Brazil (UNWANTED EMISSIONS - ALL PRODUCTS)

Regulatory declarations for AP-8432 - BRAZIL

For more information consult the website www.anatel.gov.br.

Nota: A marca de certificação se aplica ao Transceptor, modelo AP-8432. Este equipamento opera em caráter secundário, isto é, não tem direito a proteção contra interferência prejudicial, mesmo de estações do mesmo tipo, e não pode causar interferência a sistemas operando em caráter primário. Para maiores informações sobre ANATEL consulte o site: www.anatel.gov.br.

Este equipamento opera em caráter secundário, isto é, não tem direito a proteção contra interferência prejudicial, mesmo de estações do mesmo tipo, e não pode causar interferência a sistemas operando em caráter primário.

Este produto está homologado pela Anatel, de acordo com os procedimentos regulamentados pela Resolução n°242/2000 e atende aos requisitos técnicos aplicados, incluindo os limites de exposição da Taxa de Absorção Específica referente a campos elétricos, magnéticos e eletromagnéticos de radiofrequência, de acordo com as Resoluções n° 303/2002 e 533/2009.

Este dispositivo está em conformidade com as diretrizes de exposição à radiofrequência quando posicionado pelo menos 25 centímetros de distância do corpo. Para maiores informações, consulte o site da Anatel.

Chile

Este equipo cumple con la Resolución No 403 de 2008, de la Subsecretaria de telecomunicaciones, relativa a radiaciones electromagnéticas.

China

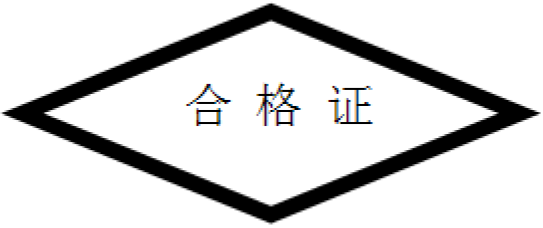

Hong Kong

In accordance with HKTA1039, the band 5.15GHz - 5.35GHz is for indoor operation only.

Mexico

Restrict Frequency Range to: 2.450 – 2.4835 GHz.

La operación de este equipo está sujeta a las siguientes dos condiciones: (1) es posible que este equipo o dispositivo no cause interferencia perjudicial y (2) este equipo o dispositivo debe aceptar cualquier interferencia, incluyendo la que pueda causar su operación no deseada.

S. Korea

For a radio equipment using 2400~2483.5MHz or 5725~5825MHz, the following two expression should be displayed;

무선설비는 운용 중 전파혼신 가능성이 있음

당해 무선설비 는전파혼 신 가능성이 있으므로 인명안전과 관련된 서비스는 할 수 없습니다.

Taiwan

臺灣

低功率電波輻射性電機管理辦法

第十二條
經型式認證合格之低功率射頻電機，非經許可，公司、商號或使用者均不得擅自變更頻率、加大功率或變更原設計之特性及功能。

第十四條

低功率射頻電機之使用不得影響飛航安全及干擾合法通信；經發現有干擾現象時，應立即停用，並改善至無干擾時方得繼續使用。
前項合法通信，指依電信規定作業之無線電通信。
低功率射頻電機須忍受合法通信或工業、科學及醫療用電波輻射性電機設備之干擾。

在 5.25-5.35 秭赫頻帶內操作之無線資訊傳輸設備，限於室內使用

電磁波曝露量MPE標準值1mW/cm^2，本產品使用時建議應距離人體：**40 cm**

Turkey

Bu cihaz Türkçe karakterlerin tamam?n? ihtiva eden ETSI TS 123.038 V8.0.0 (veya sonraki sürümün

kodu) ve ETSI TS 123.040 V8.1.0 (veya sonraki sürümün kodu) teknik özelliklerine uygundur.

Ukraine

Дане обладнання відповідає вимогам технічного регламенту №1057, № 2008 на обмеження щодо використання деяких небезпечних речовин в електричних та електронних пристроях.

Thailand

เครื่องโทรคมนาคมและอุปกรณ์นี้ มีความสอดคล้องตามข้อกำหนดของ กทช.

5.12 Waste Electrical and Electronic Equipment (WEEE)

English: For EU Customers: All products at the end of their life must be returned to Zebra for recycling. For information on how to return product, please go to: www.zebra.com/weee.

Français: Clients de l'Union Européenne: Tous les produits en fin de cycle de vie doivent être retournés à Zebra pour recyclage. Pour de plus amples informations sur le retour de produits, consultez : www.zebra.com/weee.

Español: Para clientes en la Unión Europea: todos los productos deberán entregarse a Zebra al final de su ciclo de vida para que sean reciclados. Si desea más información sobre cómo devolver un producto, visite: www.zebra.com/weee.

Български: За клиенти от ЕС: След края на полезния им живот всички продукти трябва да се връщат на Zebra за рециклиране. За информация относно връщането на продукти, моля отидете на адрес: www.zebra.com/weee.

Deutsch: Für Kunden innerhalb der EU: Alle Produkte müssen am Ende ihrer Lebensdauer zum Recycling an Zebra zurückgesandt werden. Informationen zur Rücksendung von Produkten finden Sie unter www.zebra.com/weee.

Italiano: per i clienti dell'UE: tutti i prodotti che sono giunti al termine del rispettivo ciclo di vita devono essere restituiti a Zebra al fine di consentirne il riciclaggio. Per informazioni sulle modalità di restituzione, visitare il seguente sito Web: www.zebra.com/weee.

Português: Para clientes da UE: todos os produtos no fim de vida devem ser devolvidos à Zebra para reciclagem. Para obter informações sobre como devolver o produto, visite: www.zebra.com/weee.

Nederlands: Voor klanten in de EU: alle producten dienen aan het einde van hun levensduur naar Zebra te worden teruggezonden voor recycling. Raadpleeg www.zebra.com/weee voor meer informatie over het terugzenden van producten.

Polski: Klienci z obszaru Unii Europejskiej: Produkty wycofane z eksploatacji nale¿y zwróciæ do firmy Zebra w celu ich utylizacji. Informacje na temat zwrotu produktów znajduj¹ siê na stronie internetowej www.zebra.com/weee.

Čeština: Pro zákazníky z EU: Všechny produkty je nutné po skonèení jejich životnosti vrátit spoleènosti Zebra k recyklaci. Informace o zpùsobu vrácení produktu najdete na webové stránce: www.zebra.com/weee.

Eesti: EL klientidele: kõik tooted tuleb nende eluea lõppedes tagastada taaskasutamise eesmärgil Zebra'ile. Lisainformatsiooni saamiseks toote tagastamise kohta külastage palun aadressi: www.zebra.com/weee.

Magyar: Az EU-ban vásárlóknak: Minden tönkrement terméket a Zebra vállalathoz kell eljuttatni újrahasznosítás céljából. A termék visszajuttatásának módjával kapcsolatos tudnivalókért látogasson el a www.zebra.com/weee weboldalra.

Svenska: För kunder inom EU: Alla produkter som uppnått sin livslängd måste returneras till Zebra för återvinning. Information om hur du returnerar produkten finns på www.zebra.com/weee.

Suomi: Asiakkaat Euroopan unionin alueella: Kaikki tuotteet on palautettava kierrätettäväksi Zebra-yhtiöön, kun tuotetta ei enää käytetä. Lisätietoja tuotteen palauttamisesta on osoitteessa www.zebra.com/weee.

Dansk: Til kunder i EU: Alle produkter skal returneres til Zebra til recirkulering, når de er udtjent. Læs oplysningerne om returnering af produkter på: www.zebra.com/weee.

Ελληνικά: Για πελάτες στην Ε.Ε.: Όλα τα προϊόντα, στο τέλος της διάρκειας ζωής τους, πρέπει να επιστρέφονται στην Zebra για ανακύκλωση. Για περισσότερες πληροφορίες σχετικά με την επιστροφή ενός προϊόντος, επισκεφθείτε τη διεύθυνση www.zebra.com/weee στο Διαδίκτυο.

Malti: Għal klijenti fl-UE: il-prodotti kollha li jkunu waslu fl-aħħar tal-ħajja ta' l-użu tagħhom, iridu jiġu rritornati għand Zebra għar-riċiklaġġ. Għal aktar tagħrif dwar kif għandek tirritorna l-prodott, jekk jogħġbok żur: www.zebra.com/weee.

Românesc: Pentru clienţii din UE: Toate produsele, la sfârşitul duratei lor de funcţionare, trebuie returnate la Zebra pentru reciclare. Pentru informaţii despre returnarea produsului, accesaţi: www.zebra.com/weee.

Slovenski: Za kupce v EU: vsi izdelki se morajo po poteku življenjske dobe vrniti podjetju Zebra za reciklažo. Za informacije o vračilu izdelka obiščite: www.zebra.com/weee.

Slovenčina: Pre zákazníkov z krajín EU: Všetky výrobky musia byť po uplynutí doby ich životnosti vrátené spoločnosti Zebra na recykláciu. Bližšie informácie o vrátení výrobkov nájdete na: www.zebra.com/weee.

Lietuvių: ES vartotojams: visi gaminiai, pasibaigus jų eksploatacijos laikui, turi būti grąžinti utilizuoti į kompaniją „Zebra“. Daugiau informacijos, kaip grąžinti gaminį, rasite: www.zebra.com/weee.

Latviešu: ES klientiem: visi produkti pēc to kalpošanas mūža beigām ir jānogādā atpakaļ Zebra otrreizējai pārstrādei. Lai iegūtu informāciju par produktu nogādāšanu Zebra, lūdzu, skatiet: www.zebra.com/weee.

Türkçe: AB Müşterileri için: Kullanım süresi dolan tüm ürünler geri dönüştürme için Zebra'ya iade edilmelidir. Ürünlerin nasıl iade edileceği hakkında bilgi için lütfen şu adresi ziyaret edin: www.zebra.com/weee.

5.13 TURKISH WEEE Statement of Compliance

EEE Yönetmeliğine Uygundur

6 Support

If you have a problem with your equipment, contact support for your region.

Contact information is available at: *www.zebra.com/support*

When contacting support, please provide the following information:

- Serial number of the unit
- Model number or product name
- Software type and version number

Support responds to calls by e-mail, telephone, or fax within the time limits set forth in support agreements. If you purchased your product from a business partner, contact that business partner for support.

Customer Support Web Sites

The Support site, located at *www.zebra.com/support* provides information and online assistance including developer tools, software downloads, product manuals and online repair requests.

7 Zebra Technologies Inc. End-User Software License Agreement

BY INSTALLING AND/OR USING THIS PRODUCT, YOU ACKNOWLEDGE THAT YOU HAVE READ THIS AGREEMENT, UNDERSTAND IT AND AGREE TO BE BOUND ITS TERMS. IF YOU DO NOT AGREE TO THE TERMS OF THIS AGREEMENT, ZEBRA IS NOT WILLING TO LICENSE THE PRODUCT TO YOU, AND YOU MUST NOT INSTALL OR USE THIS PRODUCT.

Definitions

Grant of License

Zebra Technologies Corporation ("Zebra") grants you ("Licensee" or "you") a personal, nonexclusive, nontransferable, revocable, nonassignable, limited license to use the software and documentation ("Product(s)") subject to the terms and conditions of this Agreement. You shall use the Products only for your internal business purposes, exclusively to support Zebra devices. Any use of the Products outside of the conditions set forth herein is strictly prohibited and will be deemed a breach of this Agreement resulting in immediate termination of your License. In the event of a breach of this Agreement, Zebra will be entitled to all available remedies at law or in equity (including immediate termination of the license without notice, immediate injunctive relief and repossession of all Products unless Licensee is a Federal agency of the United States Government).

You shall not distribute, sublicense, rent, loan, lease, export, re-export, resell, ship or divert or cause to be exported, re-exported, resold, shipped or diverted, directly or indirectly, the Products under this Agreement. You shall not, and shall not permit others to: (i) modify, translate, decompile, bootleg, reverse engineer, disassemble, or extract the inner workings of the Products, (ii) copy the look-and-feel or functionality of the Products; (iii) remove any proprietary notices, marks, labels, or logos from the Products; (iv) rent or transfer all or some of the Products to any other party without Zebra's prior written consent; or (v) utilize any computer software or hardware which is designed to defeat any copy protection device, should the Products be equipped with such a protection device.

Title to all copies of Products will not pass to Licensee at any time and remains vested exclusively in Zebra. All intellectual property developed, originated, or prepared by Zebra in connection with the Products remain vested exclusively in Zebra, and this Agreement does not grant to Licensee any intellectual property rights.

Portions of the Products are protected by United States patent and copyright laws, international treaty provisions, and other applicable laws. Therefore, you must treat the Products like any other copyrighted material (e.g., a book or musical recording) except that you may make one copy of the Product solely for back-up purposes. Unauthorized duplication of the Products constitutes copyright infringement, and in the United States is punishable in federal court by fine and imprisonment.

Limited Warranty

Zebra warrants for a period of ninety (90) days from your receipt of the Products to you that the Software, under normal use, will perform substantially in accordance with Zebra's published specifications for that release level of the Software. The written materials are provided "AS IS" and without warranty of any kind. Zebra's entire liability and your sole and exclusive remedy for any breach of the foregoing limited warranty will be, at Zebra's option, the provision of a downloadable patch or replacement code, or a refund of the unused portion of your bargained for contractual benefit up to the amount paid for the Products.

Disclaimer

THIS LIMITED WARRANTY IS THE ONLY WARRANTY PROVIDED BY ZEBRA, AND ZEBRA MAKES, AND YOU RECEIVE, NO OTHER WARRANTIES OF ANY KIND, WHETHER EXPRESS, IMPLIED, STATUTORY, OR IN ANY COMMUNICATION WITH YOU. ZEBRA SPECIFICALLY DISCLAIMS ANY WARRANTY INCLUDING THE IMPLIED WARRANTIES OF MERCHANTABILTY, NONINFRINGEMENT, OR FITNESS FOR A PARTICULAR PURPOSE. ZEBRA DOES NOT WARRANT THAT THE PRODUCTS WILL MEET YOUR REQUIREMENTS, OR THAT THE OPERATION OF THE PRODUCTS WILL BE UNINTERRUPTED OR ERROR FREE, OR THAT DEFECTS IN THE PRODUCTS WILL BE CORRECTED. ZEBRA MAKES NO WARRANTY WITH RESPECT TO THE CORRECTNESS, ACCURACY, OR RELIABILITY OF THE PRODUCTS. Some jurisdictions do not allow the exclusion of implied warranties, so the above exclusion may not apply to you.

Limitation of Liability

THE TOTAL LIABILITY OF ZEBRA UNDER THIS AGREEMENT FOR DAMAGES SHALL NOT EXCEED THE FAIR MARKET VALUE OF THE PRODUCTS LICENSED UNDER THIS AGREEMENT. IN NO EVENT WILL ZEBRA BE LIABLE IN ANY WAY FOR INCIDENTAL, CONSEQUENTIAL, INDIRECT, SPECIAL OR PUNITIVE DAMAGES OF ANY NATURE, INCLUDING WITHOUT LIMITATION, LOST BUSINESS PROFITS, OR LIABILITY OR INJURY TO THIRD PERSONS, WHETHER FORESEEABLE OR NOT, REGARDLESS OF WHETHER ZEBRA HAS

BEEN ADVISED OF THE POSSIBILITY OF SUCH DAMAGES. Some jurisdictions do not permit limitations of liability for incidental or consequential damages, so the above exclusions may not apply to you. This Limitation of Liability provision survives the termination of this Agreement and applies notwithstanding any contrary provision in this Agreement. Licensee must bring any action under this Agreement within one (1) year after the cause of action arises.

Maintenance

Unless provided for in a separate agreement, Zebra shall not be responsible for maintenance or field service of the Products.

High Risk Activities

The Products are not fault-tolerant and are not designed, manufactured or intended for use or resale as on-line control software in hazardous environments requiring fail-safe performance, such as in the operation of nuclear facilities, aircraft navigation or communication systems, air traffic control, direct life support machines, or weapons systems, in which the failure of the Products could lead directly to death, personal injury, or severe physical or environmental damage ("High Risk Activities"). Zebra and its suppliers specifically disclaim any express or implied warranty of fitness for High Risk Activities, and if you elect to use the Products in any High Risk Activities, you agree to indemnify, defend, and hold Zebra harmless from and against any and all costs, damages, and losses related to that use.

U.S. Government

If you are acquiring the Products on behalf of any unit or agency of the U.S. Government, the following shall apply. Use, duplication, or disclosure of the Products is subject to the restrictions set forth in subparagraphs (c) (1) and (2) of the Commercial Computer Software - Restricted Rights clause at FAR 52.227-19 (JUNE 1987), if applicable, unless being provided to the Department of Defense. If being provided to the Department of Defense, use, duplication, or disclosure of the Products is subject to the restricted rights set forth in subparagraph (c) (1) (ii) of the Rights in Technical Data and Computer Software clause at DFARS 252.227-7013 (OCT 1988), if applicable. Products may or may not include a Restricted Rights notice, or other notice referring specifically to the terms and conditions of this Agreement. The terms and conditions of this Agreement shall each continue to apply, but only to the extent that such terms and conditions are not inconsistent with the rights provided to you under the aforementioned provisions of the FAR and DFARS, as applicable to the particular procuring agency and procurement transaction.

Assignment

Except as otherwise provided in this section, neither party may assign this Agreement, or any of its rights or obligations under this Agreement, without the prior written approval of the other party, which will not be unreasonably withheld. Any attempted assignment, delegation, or transfer without the necessary approval will be void. Notwithstanding the foregoing, for any Zebra acquisition, merger, consolidation, reorganization, or similar transaction, or any spin-off, divestiture, or other separation of a Zebra business, Zebra may, without the prior written consent of the other party: (i) assign its rights and obligations under this Agreement, in whole or in part, or (ii) split and assign its rights and obligations under this Agreement so as to retain the benefits of this Agreement for both Zebra and the assignee entity(ies) (and their respective Affiliates) following the split.

Governing Law

This Agreement shall be governed by the laws of the United States of America to the extent that they apply and otherwise by the laws of the State of New York without regard to its conflict of laws provisions or by the internal substantive laws of the country to which the Products is shipped if end-user customer is a sovereign governmental entity. The terms of the U.N. Convention on Contracts for the International Sale of Goods do not apply. In the event that the Uniform Computer information Transaction Act, any version of this Act, or a substantially similar law (collectively "UCITA") becomes applicable to a Party's performance under this Agreement, UCITA does not govern any aspect of this End User License Agreement or any license granted under this End-User License Agreement, or any of the parties' rights or obligations under this End User License Agreement. The governing law will be that in effect prior to the applicability of UCITA.

Compliance with Laws

Licensee will comply with all applicable laws and regulations, including export laws and regulations of the United States. Licensee will not, without the prior authorization of Zebra and the appropriate governmental authority of the United States, in any form export or re-export, sell or resell, ship or reship, or divert, through direct or indirect means, any item or technical data or direct or indirect products sold or otherwise furnished to any person within any territory for which the United States Government or any of its agencies at the time of the action, requires an export license or other governmental approval. Violation of this provision will be a material breach of this Agreement, permitting immediate termination by Zebra.

Third Party Software

The Products may contain one or more items of Third-Party Software. The terms of this Agreement govern your use of any Third-Party Software UNLESS A SEPARATE THIRD-PARTY SOFTWARE LICENSE IS INCLUDED, IN WHICH CASE YOUR USE OF THE THIRD-PARTY SOFTWARE WILL THEN BE GOVERNED BY THE SEPARATE THIRD-PARTY LICENSE.

Open Source Software

The Products may contain one or more items of Open Source Software. Open Source Software is software covered by a publicly available license governed solely under Copyright law, whereas the complete terms and obligations of such license attach to a licensee solely through the act of copying, using and/or distribution of the licensed software, such obligations often include one or more of attribution obligations, distribution obligations, copyleft obligations, and intellectual property encumbrances. The use of any Open Source Software is subject to the terms and conditions of this Agreement as well as the terms and conditions of the corresponding license of each Open Source Software package. If there is a conflict between the terms and conditions of this Agreement and the terms and conditions of the Open Source Software license, the applicable Open Source Software license will take precedence. Copies of the licenses for the included Open Source Software, if any, as well as their attributions, acknowledgements, and software information details, are provided in the electronic copy of this Agreement, which is available in the Legal Notices or README file associated with the Product. Zebra is required to reproduce the software licenses, acknowledgments and copyright notices as provided by the authors and owners, thus, all such information is provided in its native language form, without modification or translation. Depending on the license terms of the specific Open Source Software, source code may not be provided. Please reference and review the entire Open Source Software information to identify which Open Source Software packages have source code provided or available. For instructions on how to obtain a copy of any source code made publicly available by Zebra related to Open Source Software distributed by Zebra, you may send your request (including the Zebra Product name and version, along with the Open Source Software specifics) in writing to: Zebra Technologies Corporation, Open Source Software Director, Legal Department, 3 Overlook Point, Lincolnshire, IL 60069 USA.

©2016 ZIH Corp and/or its affiliates. All rights reserved. Zebra and the stylized Zebra head are trademarks of ZIH Corp., registered in many jurisdictions worldwide. All other trademarks are the property of their respective owners.

8 AP-8432 Access Point China ROHS Compliance

	有害物质					
部件名称 **(Parts)**	铅 **(Pb)**	汞 **(Hg)**	镉 **(Cd)**	六价铬 **(Cr(VI))**	多溴联苯 **(PBB)**	多溴二苯醚 **(PBDE)**
金属部件 (Metal Parts)	X	O	O	O	O	O
电路模块 (Circuit Modules)	X	O	O	O	O	O
电缆及电缆组件 (Cables and Cable Assemblies)	X	O	O	O	O	O
塑料和聚合物部件 (Plastic and Polymeric Parts)	O	O	O	O	O	O
光学和光学组件 (Optics and Optical Components)	O	O	O	O	O	O
电池 (Batteries)	O	O	O	O	O	O

本表格依据 SJ/T 11364 的规定编制。

O: 表示该有害物质在该部件所有均质材料中的含量均在 GB/T 26572 规定的限量 要求以下。

X: 表示该有害物质至少在该部件的某一均质材料中的含量超出 GB/T 26572 规定 的限量要求。(企业可在此处，根据实际情况对上表中打 “×” 的技术原因进 行进一步说明。)

This table was created to comply with China RoHS requirements for AP-8432 Access Points.

Zebra Technologies Corporation
Lincolnshire, IL 60069 USA

Zebra and the Zebra head graphic are registered trademarks of ZIH Corp. The Symbol logo is a registered trademark of Symbol Technologies, Inc. a Zebra Technologies company.

© 2016 Symbol Technologies, Inc.

MN-002724-01 Revision A April 2016